SHELTER ASSEMBLY MANUAL Model#304020P

W9.15m*L12.2m*H6.1m

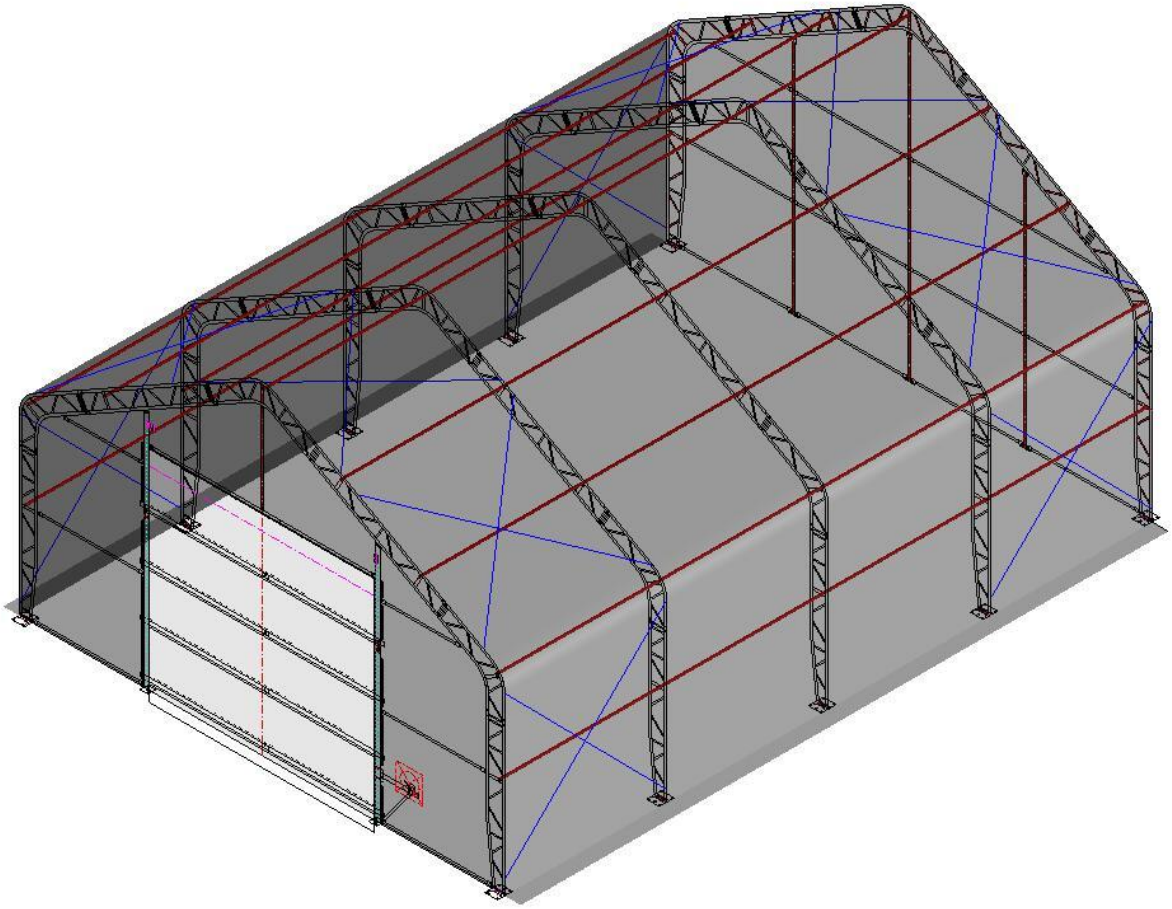

RECOMMENDED TOOLS

Equipment List

Speed Wrench 22#.23#.24#	
Hammer (30lb)	
Rope (12#)	
Long Tape (50m)	
Hammer Drill*1	
Lifter*2	
Crane*1	
Forklift*1	
Protective equipment	

YOU MUST READ THIS DOCUMENT BEFORE YOU BEGIN TO ASSEMBLE THE SHELTER.

Thank you for purchasing our shelter. When properly assembled and maintained, this product will provide years of reliable service. These instructions include helpful hints and important information needed to safely assemble and properly maintain the shelter. Please read these instructions ***before*** you begin.

If you have any questions during the assembly, please contact local dealer for assistance.

SAFETY PRECAUTIONS

. Wear eye protection.
. Wear head protection
. Wear gloves when handling metal tubes
. Use a portable GFCI (Ground Fault Circuit Interrupter) when working with power tools and cords.
. Do not climb on the shelter or framing during or after construction.
. Do not occupy the shelter during high winds, tornadoes, or hurricanes.
. Provide adequate ventilation if the structure is enclosed.
. Do not store hazardous materials in the shelter.
. Provide proper ingress and egress to prevent entrapment.

ANCHORING INSTRUCTIONS

Prior to assembling this shelter, please read the ***MUST READ*** document included with the shipment.

⚠**WARNING:** The anchor assembly is an integral part of the shelter construction. Improper anchoring may cause shelter instability and failure of the structure. Failing to anchor the shelter properly ***will void the manufacturer's warranty*** and may cause serious injury and damage.

LOCATION

Choosing the proper location is an important step before you begin to assemble the structure.

The following suggestions and precautions will help you determine whether your selected location is the best location.

. Never erect the structure under power lines.
. Identify whether underground cables and pipes are present ***before*** preparing the site or anchoring the structure.
. Location should be away from structures that could cause snow to drift on or around the building
. Do not position the shelter where large loads such as snow and ice, large tree branches, or other overhead obstacles could fall.
. Your shelter's cover can be quickly removed and stored prior to severe weather conditions. If strong winds or severe weather is forecast in your area, we recommend removal of cover.

SITE

After choosing a location, proper preparation of the site is essential. The following site characteristics will help ensure the integrity of the structure.

. The support structure must be level to properly and safely erect and anchor the frame.
. Drainage: Water draining off the structure and from areas surrounding the site should drain away from the site to prevent damage to the site, the structure, and contents of the structure.

⚠**WARNING:** The individuals assembling this structure are responsible for designing and furnishing all temporary bracing, shoring and support needed during the assembly process. For safety reasons, those who are not familiar with recognized construction methods and techniques ***must seek the help of a qualified contractor.***

PART LIST Roof Section				
Code	Description		QTY	Located in Box#
1	Roof Top Arch	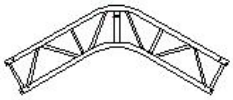	3	B
1A	Roof Top Arch for Front Panel	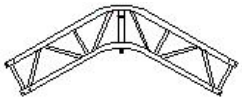	2	B
2	Roof Curve Arch	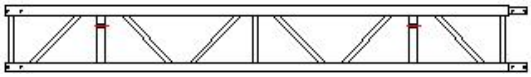	6	A
2A	Roof Curve Arch for Front&Back Panel	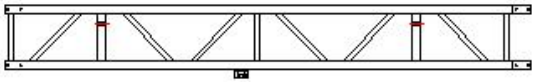	4	A
3	Shoulder Arch	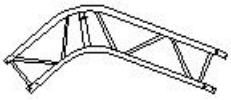	6	B
3A	Shoulder Arch for Front&Back Panel	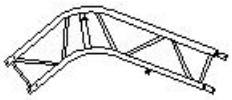	4	A
4	Standing Arch	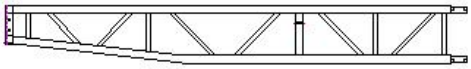	6	A
4A	Standing Arch for Front&Back Panel	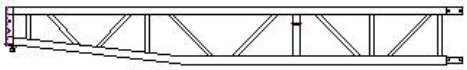	4	A
5	Base plate for Four Corners	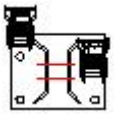	4	B
6	Interior Base Plate	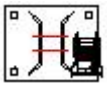	6	B
7	Purlin		36	A
8	Connector		20	B

9	Tensioning Tube for Roof Cover	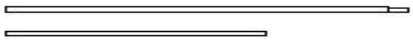	8pcs long 2pcs short	A
10	Clip	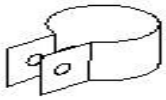	40	B
11	M8*60 Hexagon Bolt		120	B
12	M10*70 Hexagon Bolt	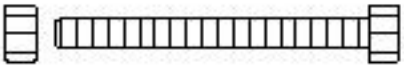	45	B
13	M14*30 Hexagon Bolt	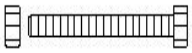	40	B
14	Plastic Cap		4	B
15	Band for Tiedown Ratchet on Base Plate	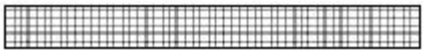	10	B
16	Rope		1bag	B
17	Anti-wear Tape	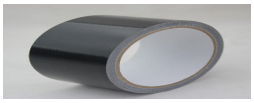	2	B
18	Stake Peg	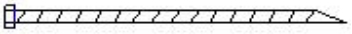	40	B
19	Turnbuckle		20	B
20	Buckle		40	B
21	Steel Wire		20	B
22	Front Cover	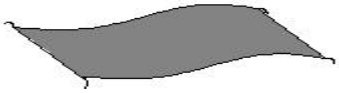	1	B

Front Panel Section				
23	Left Lower Standing Square Tube for Front Door		1	A
24	Right Lower Standing Square Tube for Front Door		1	A
25	Left Upper Standing Square Tube for Front Door		1	A
26	Right Upper Standing Square Tube for Front Door		1	A
27	Connector for Upper and Lower Square Tube		2sets	A
28	Door Beam for Front Door		1set	A
29	Bar for Door Beam		1	A
30	Upper Rail for Front Panel		2	A
31	Middle Rail for Front Panel		2	A
32	Lower Rail for Front Panel		2	A
33	Supporting Rail for Hand Winch		1	A
34	Bracing for Part#33		1	A
35	Pole for Helping Front Door Cover		1	A
36	Door Drop Tube		3sets	A
37	Bottom Door Drop Tube		1set	A
38	M8*60 Hexagon Bolt		2	B
39	M10*30 Hexagon Bolt		20	B

40	M10*50 Hexagon Bolt		4	B
41	M6*40 Hexagon Bolt		4	B
42	M12*130 Hexagon Bolt		10	B
43	M10*70 Hexagon Bolt		9	B
44	Rope for Tensioning Front and Back Panel		1bag	B
45	Zap Strap		30	B
46	Stake Peg		8	B
47	Steel Wire for Hand Winch		1bound dle	B
48	Clip for Steel Wire		4	B
49	Hand Winch		1	B
50	Front Cover		1	B
Back Panel Section				
51	Lower Standing Leg for Back Panel		3	A
52	Upper Standing Leg at two sides		2	A
53	Upper Standing Leg in the Middle		1	A
54	Base Plate for Back Panel		3	B
55	Upper Rail at Two Sides		2	A
56	Center Rail at Two Sides		2	A
57	Lower Rail at Two Sides		2	A
58	Center Rail in the Middle		4	A

59	Lower Rail in the Middle		2	A
60	M10*30 Hexagon Bolt		12	B
61	M10*50 Hexagon Bolt		6	B
62	M8*70 Hexagon Bolt		12	B
63	M10*80 Carriage Bolt		6	B
64	Rope for Tensioning Back Panel		1bag	B
65	Zap Strap		30	B
66	Stake Peg		12	B
67	Back Cover		1	B

1.Base Plate Foundation

1. Please refer to the diagram (Figure 1) to mark the position of base plates.

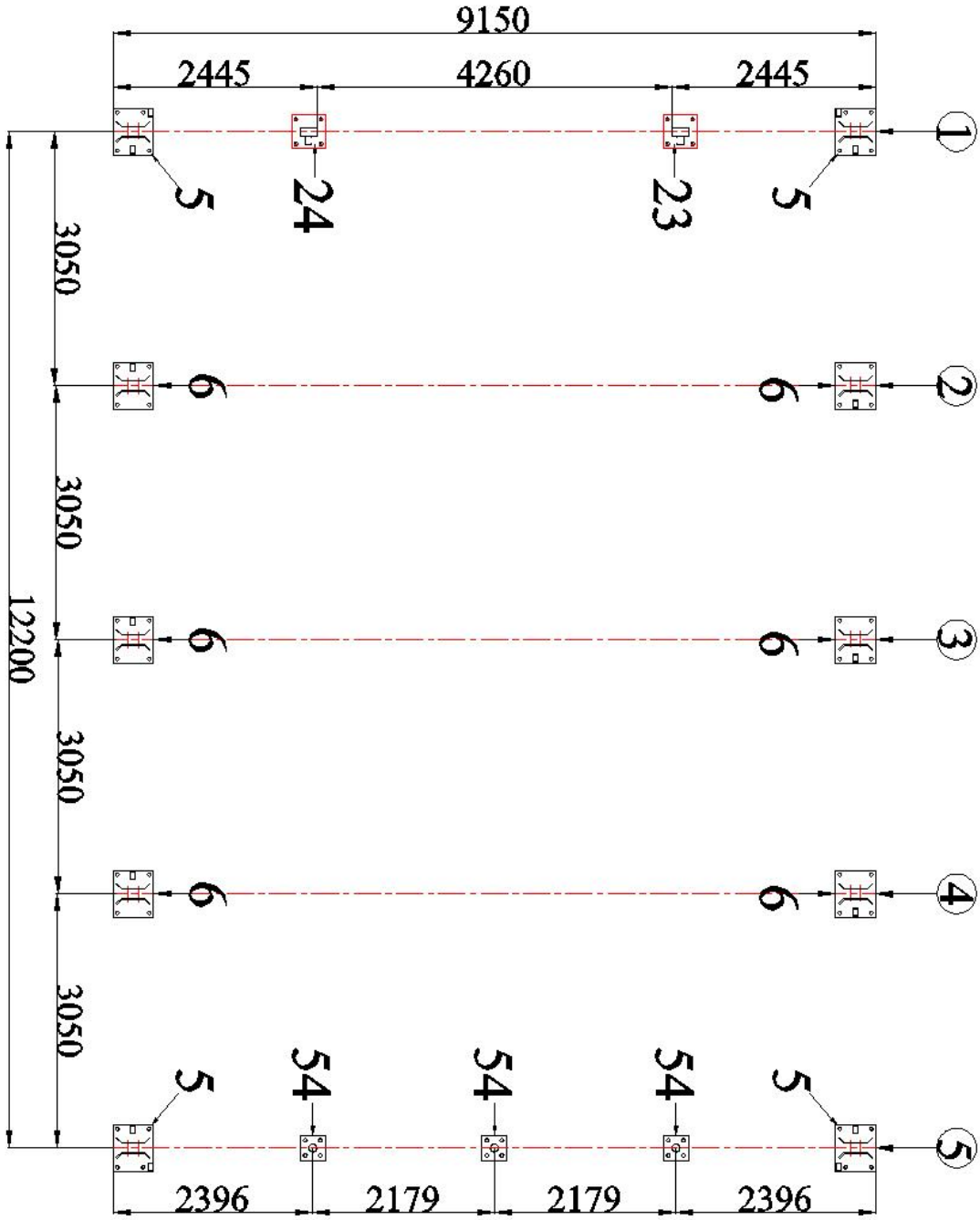

Figure. 1

2. Front&Back Arch Installation

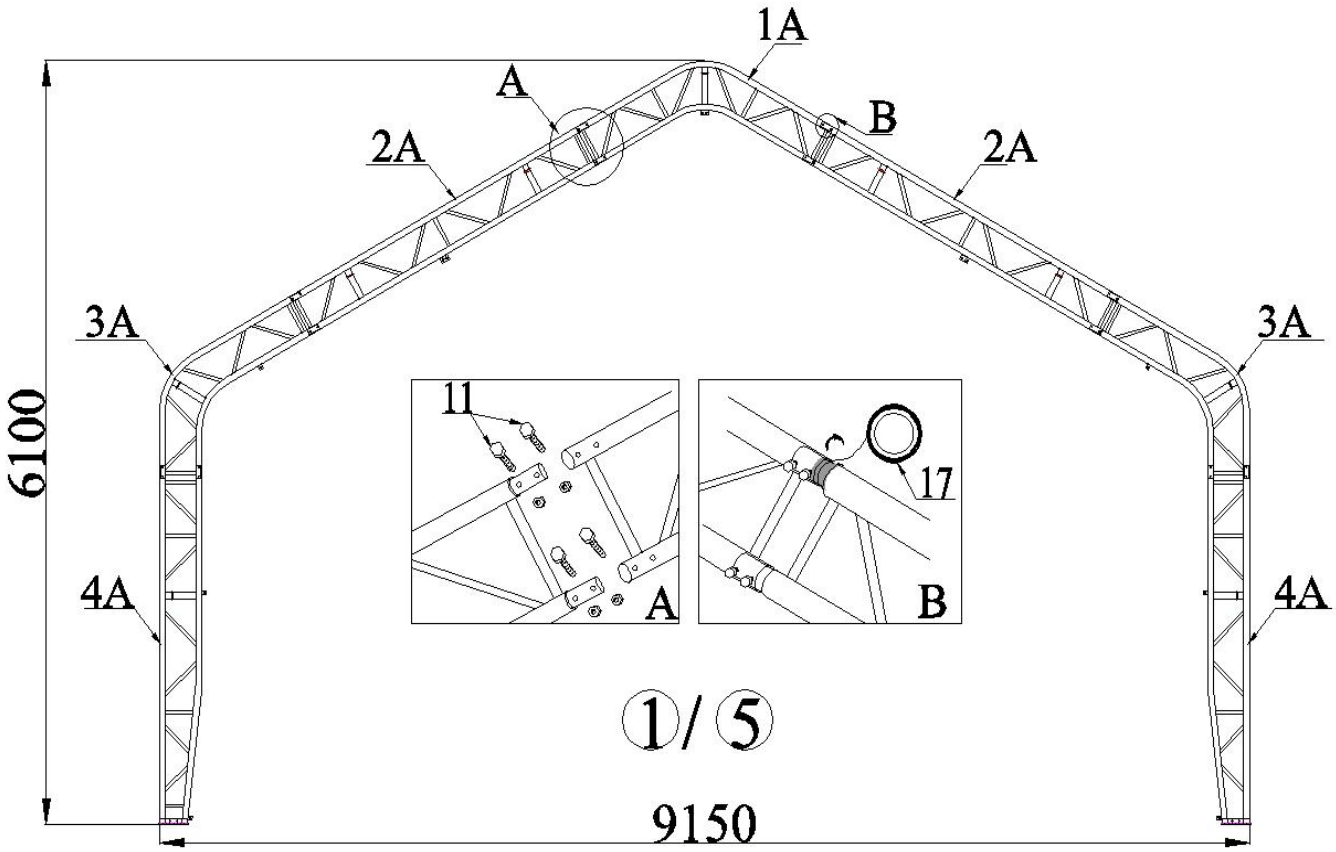

Figure.2

1.Connect Arch (No.1A, 2A, 3A, 4A) by bolt M8x60 (No.11) to be one whole panel arch.

2.Put Standing Leg (No.4A) into the Corner Base Plate (No.5) and fix it by bolt M8x60 (No.11), then same for the opposite base plate.

NOTE: Stick the joint between two trusses with Anti-wear Tape Part No.17.

3. Interior Arch Installation(Arch No.2, 3, 4)

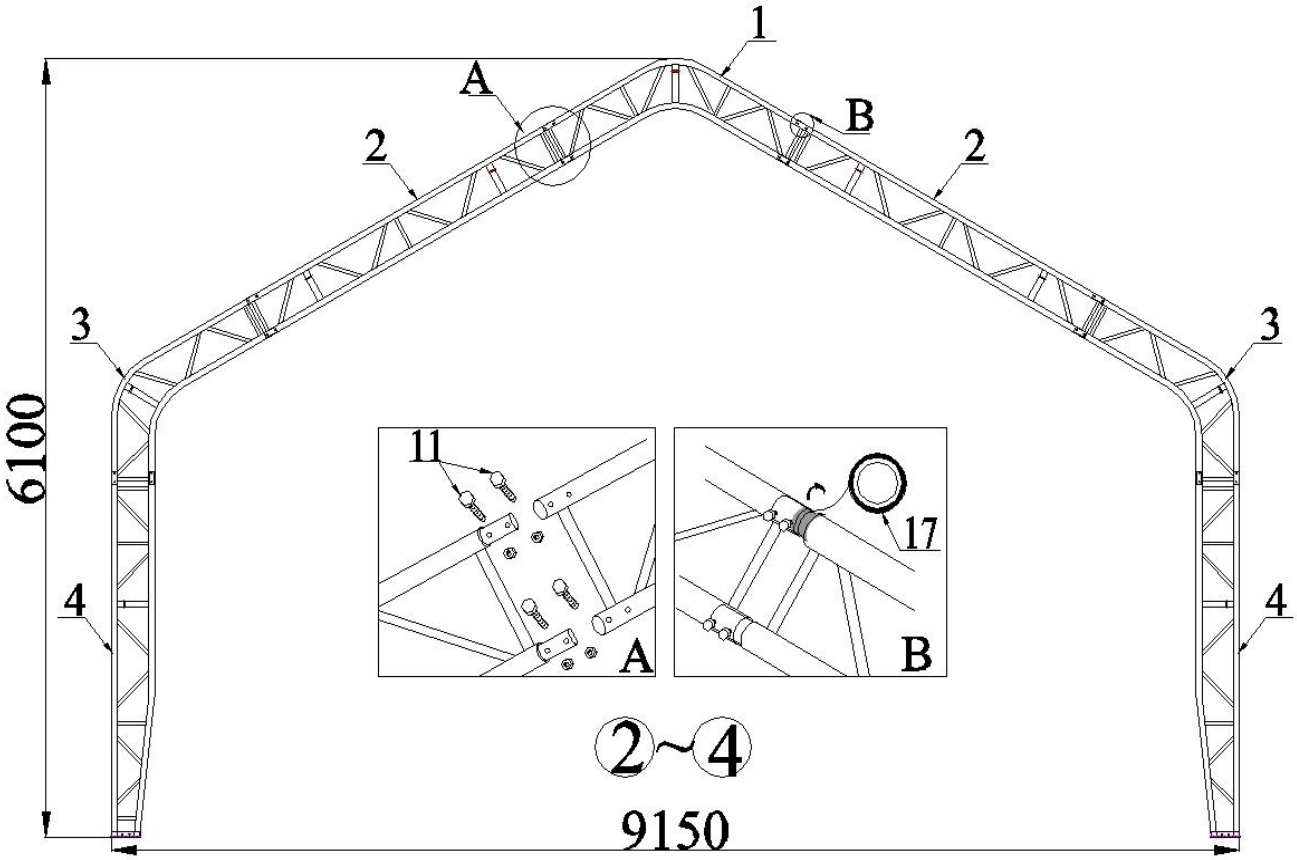

Figure.3

1.Connect Arch (No.1, 2, 3, 4) by bolt M8x60 (No.11) to be one whole panel arch.

2.Put Standing Leg (No.4) into the Interior Base Plate (No.6) and fix it by bolt M8x60 (No.11), then same for the opposite base plate.

NOTE: Stick the joint between two trusses with Anti-wear Tape Part No.17.

4. Front Panel Installation

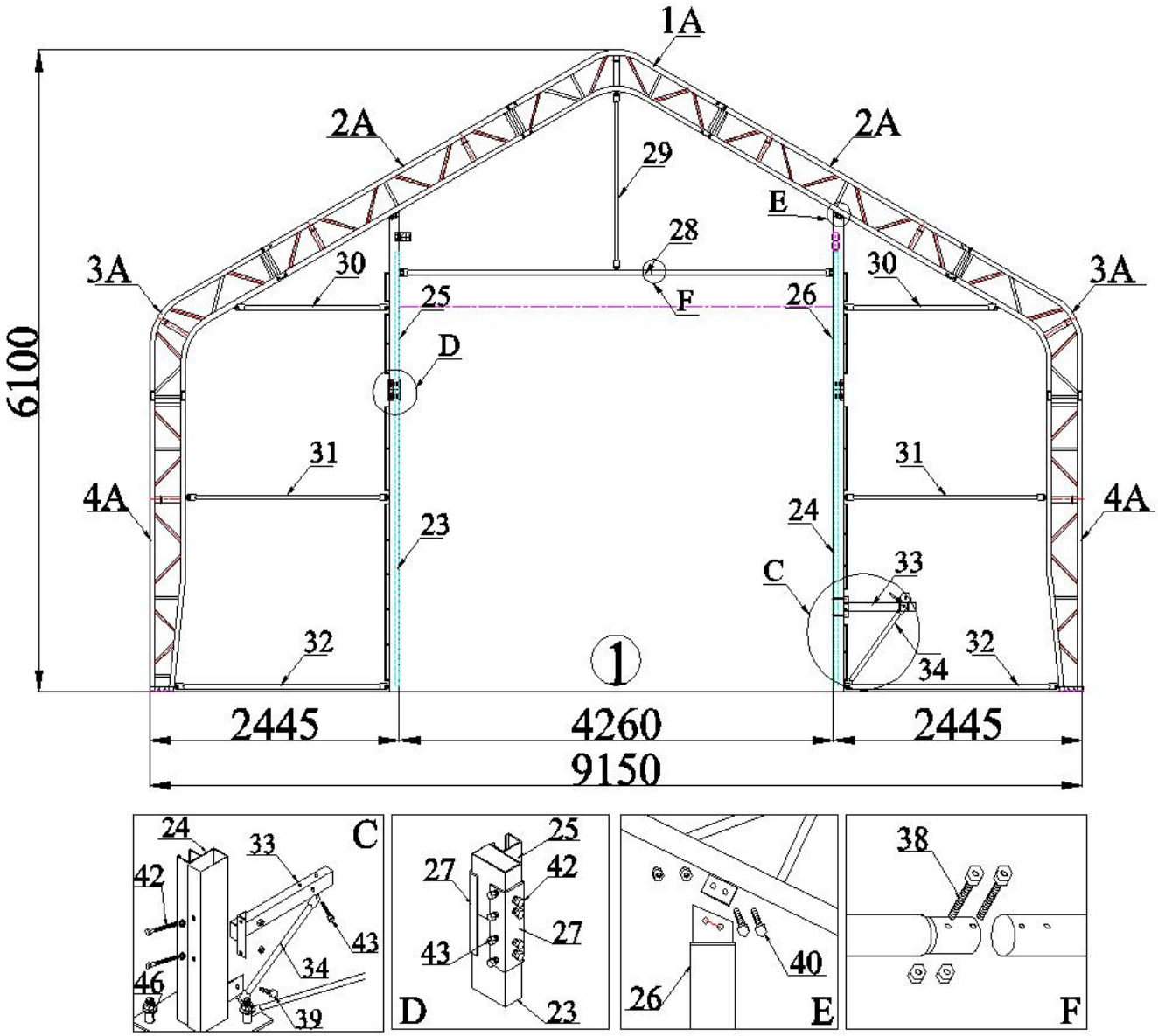

Figure.4

5. Back Panel Installation

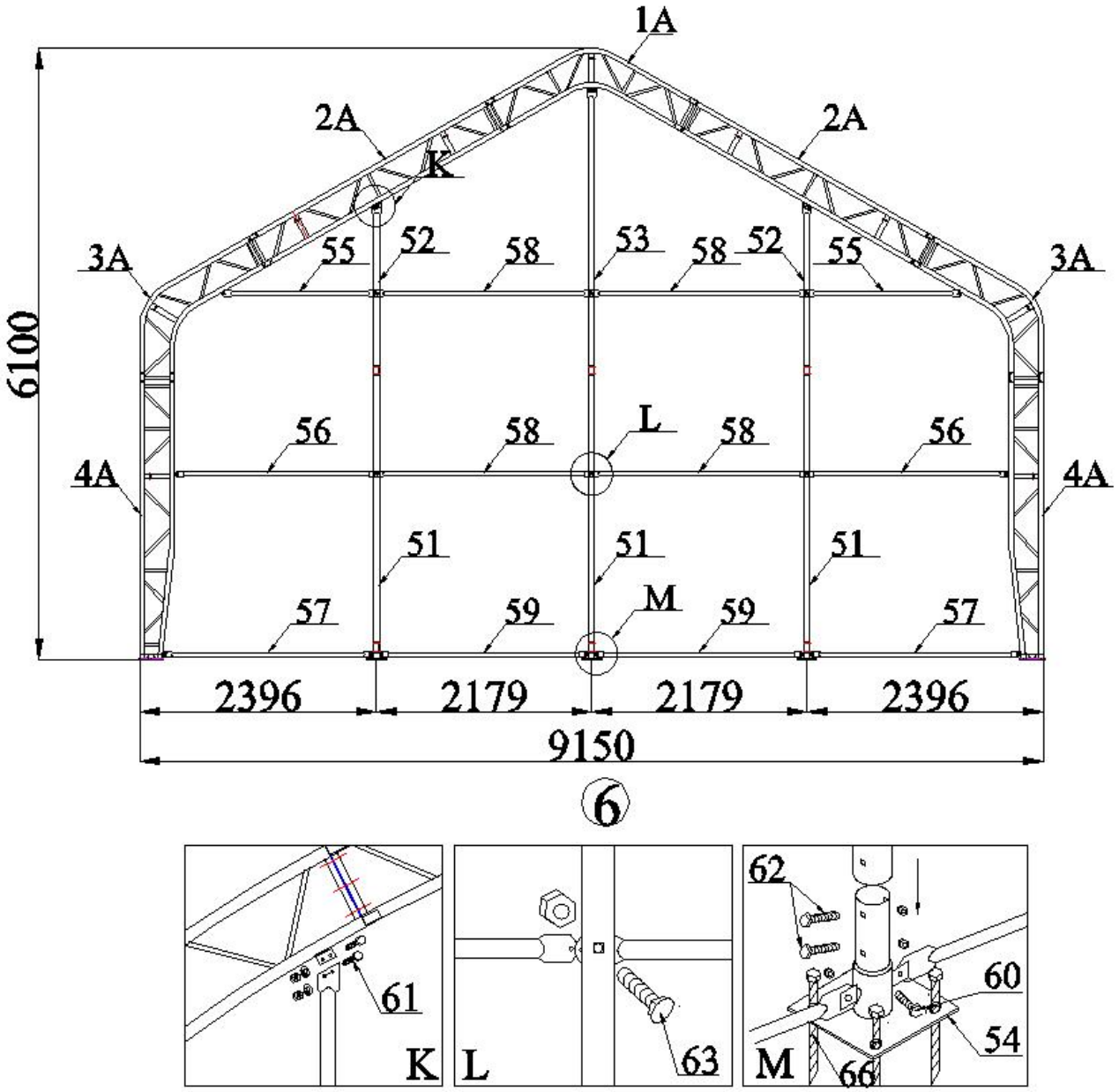

Figure.5

6. Purlin and Cross Steel Wire Installation

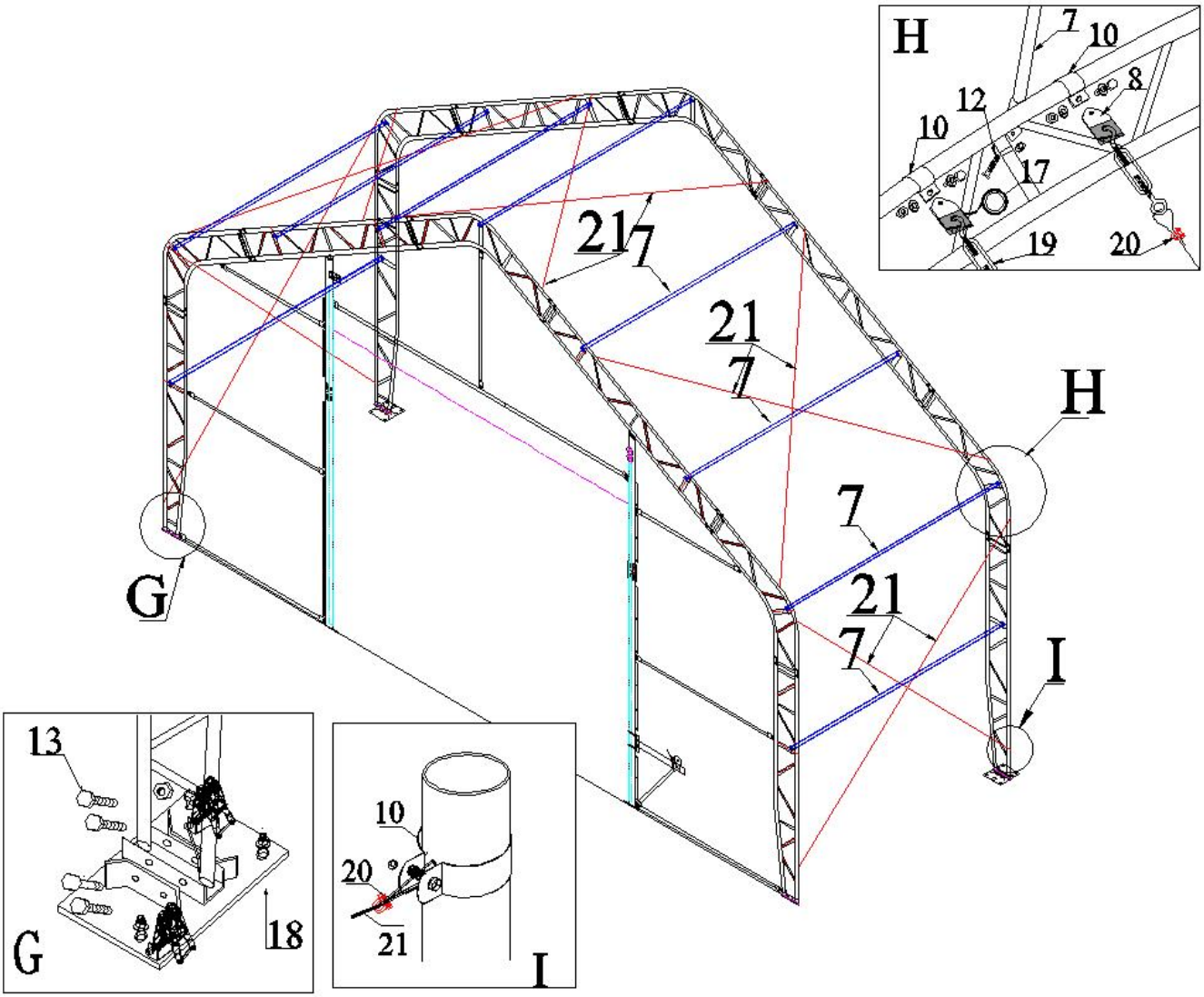

Figure.6

1.When 2 whole panel arches are in place, connect Purlin (No.7) between them by bolt M10x70 (No.12). Please note the direction of the bolt, do not leave the shaft outside where the fabric will rest. By this way, panel arches and purlins between it in turn, frames are installed.

2.Install Cross Steel Wire (No.21) by Buckles (No.20) and Turnbuckles(No.19) and Clips(No.10) and Connectors(No.8) .

<u>Make sure every single steel wire is completely tensioned.</u>

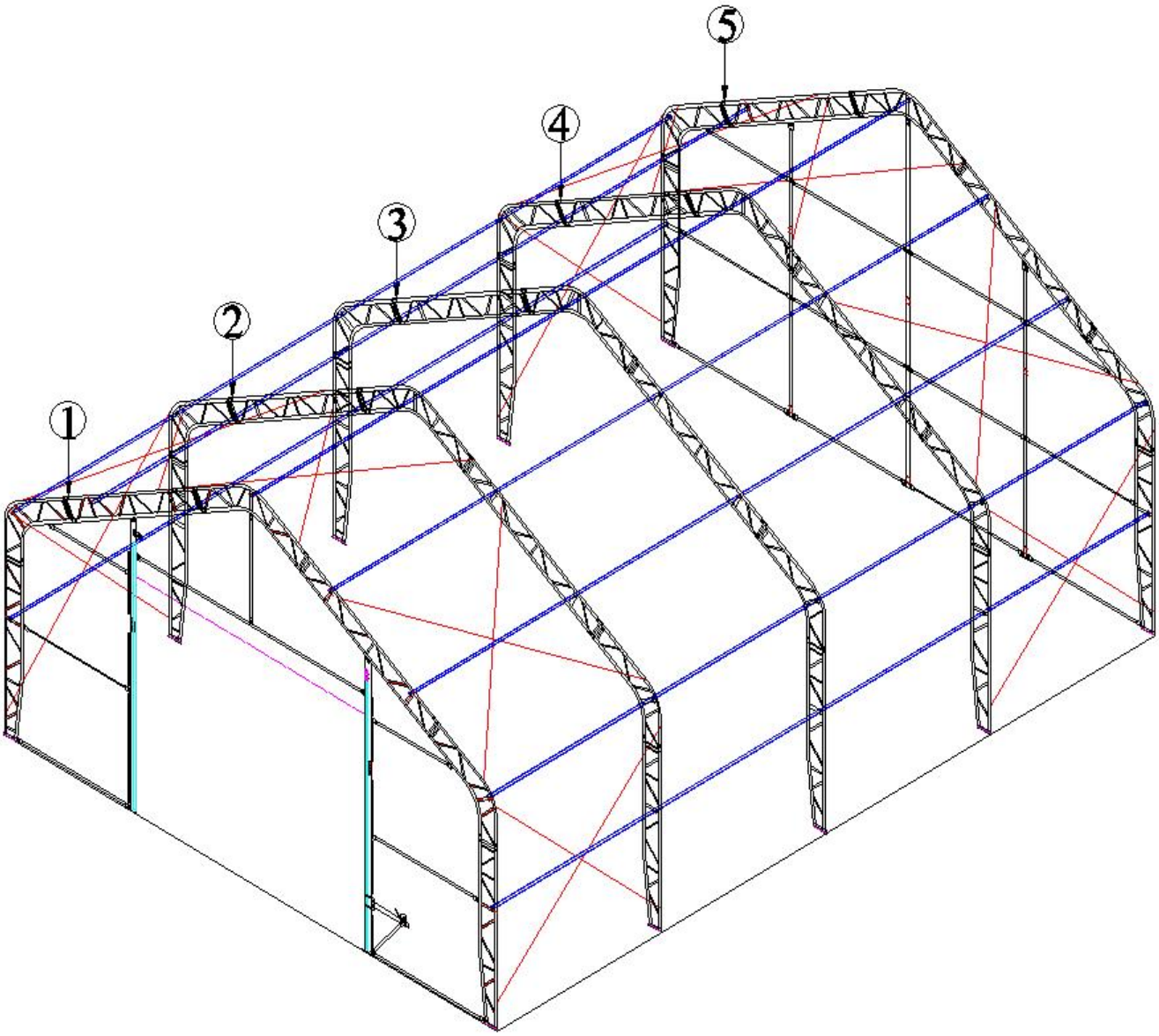

Figure.7

7. Mechanical Winch Door Installation

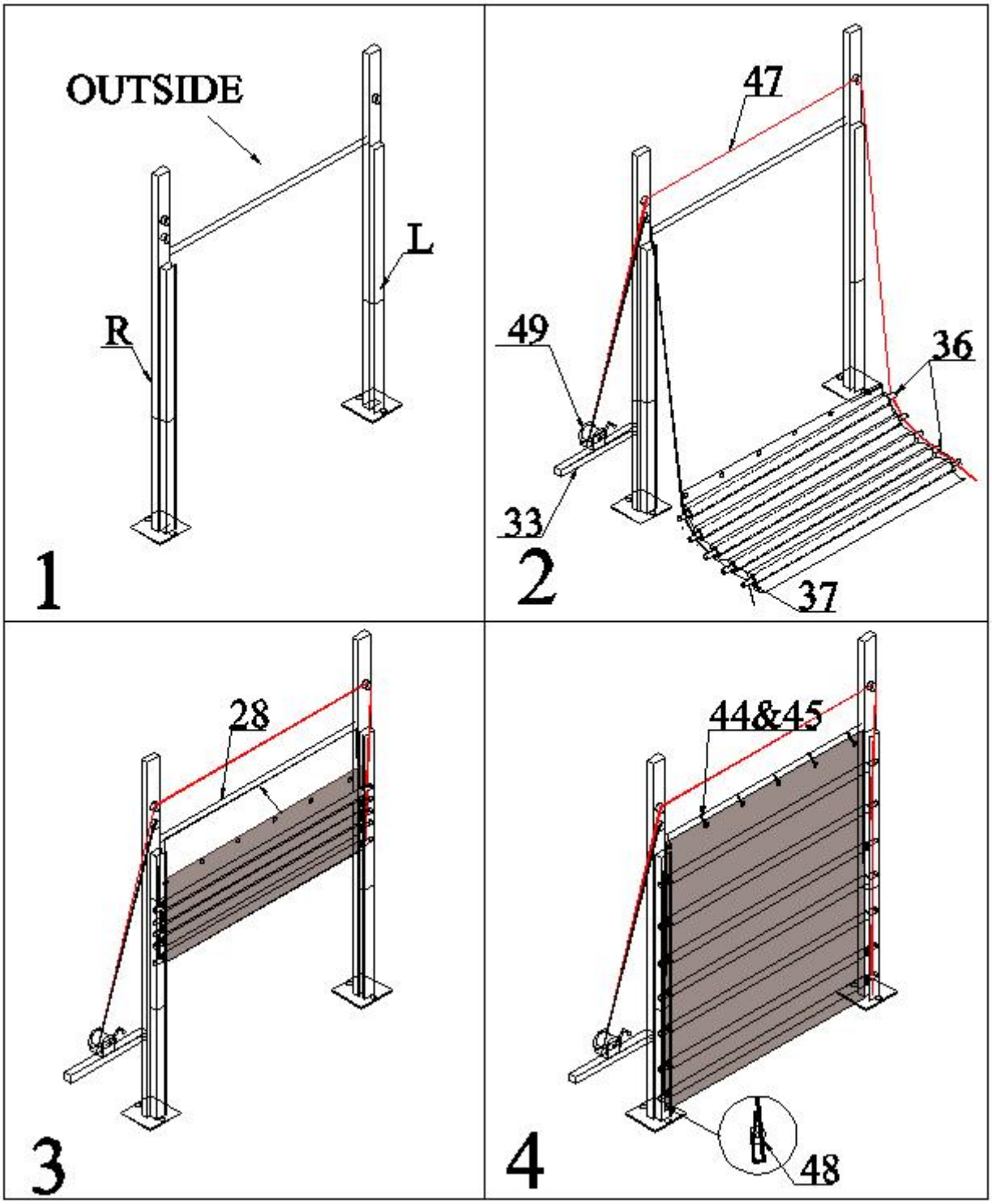

Figure.8

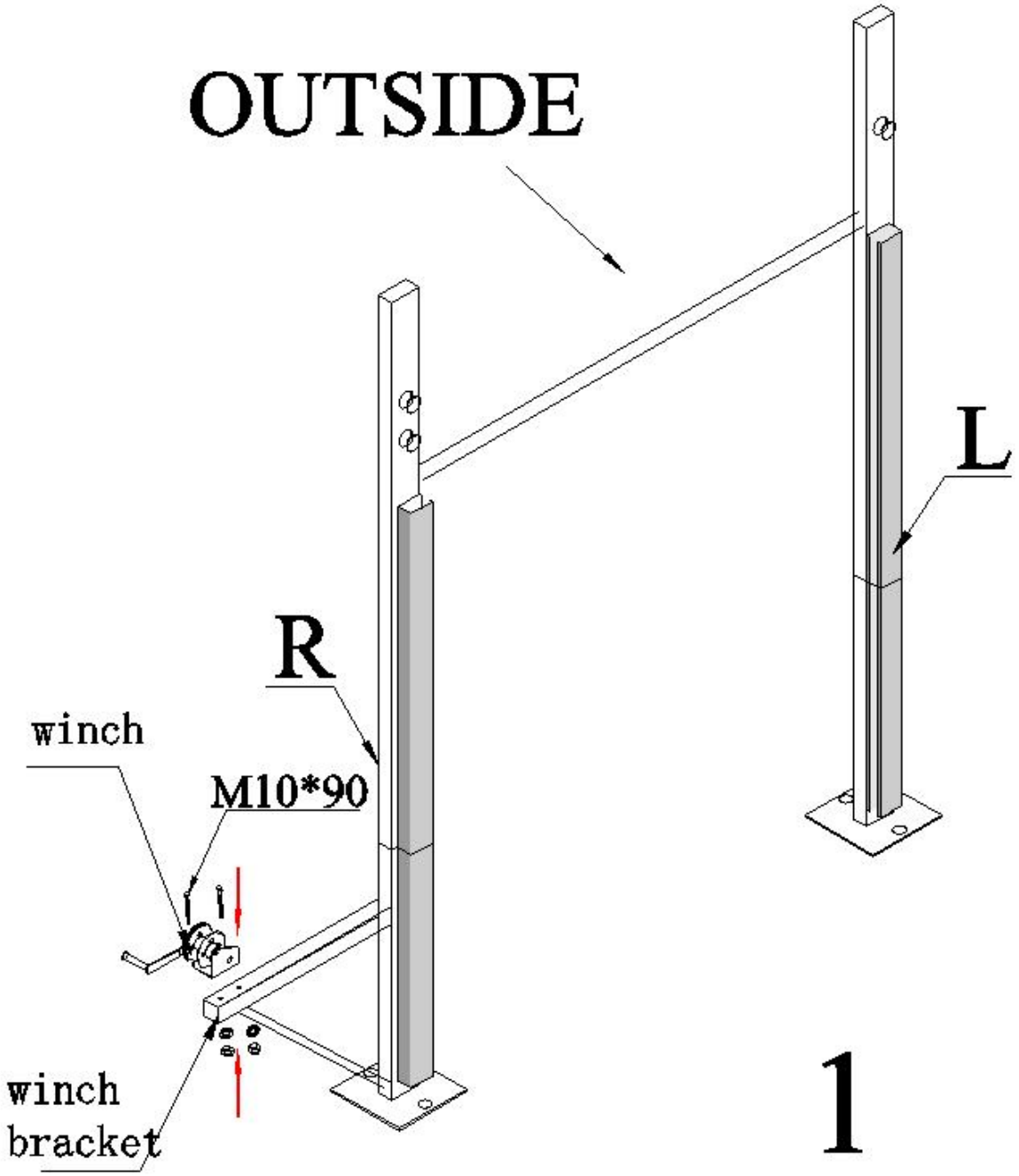
OUTSIDE
L
R
winch
M10*90
winch
bracket
1

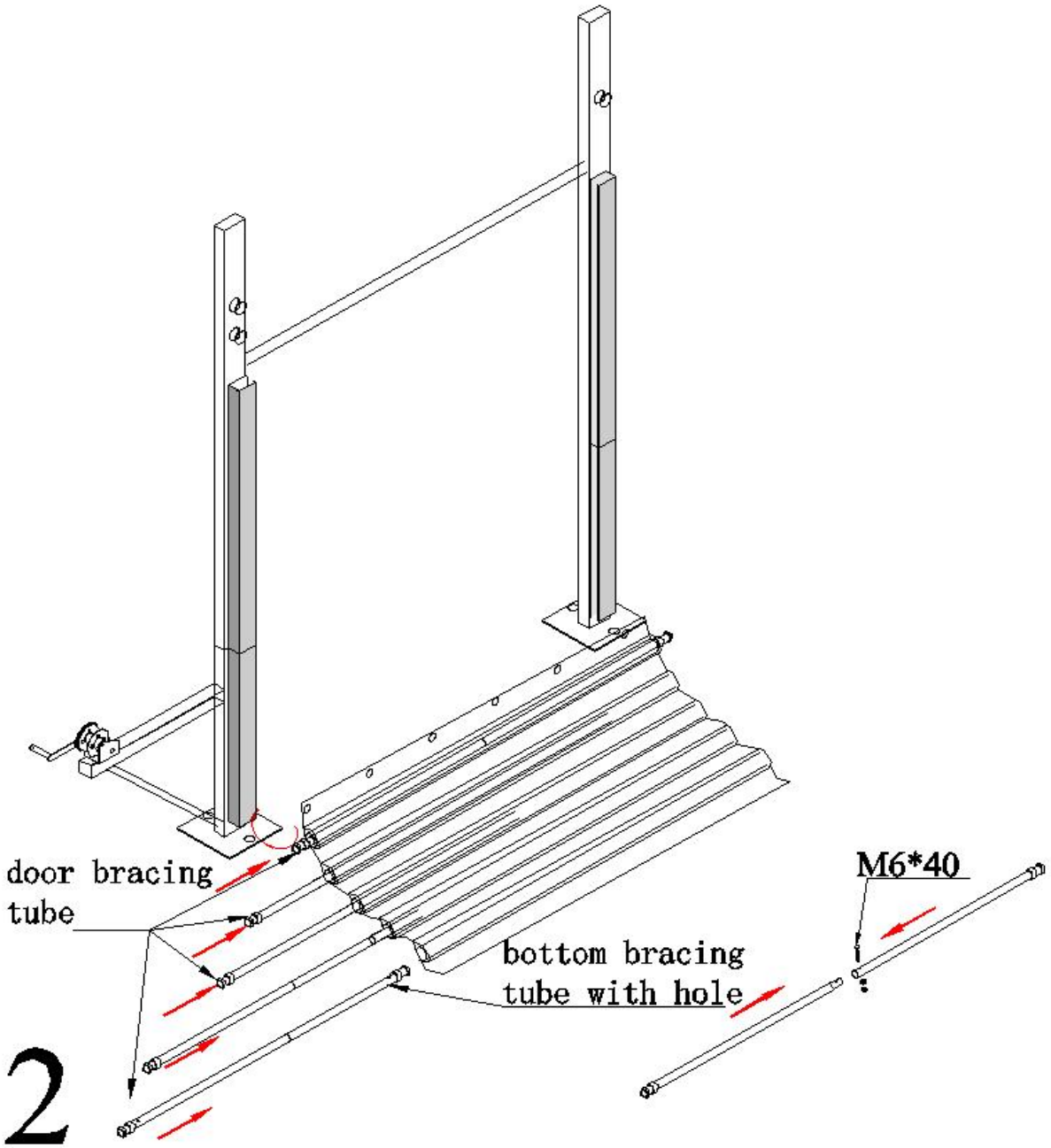
door bracing
tube
M6*40
bottom bracing
tube with hole
2

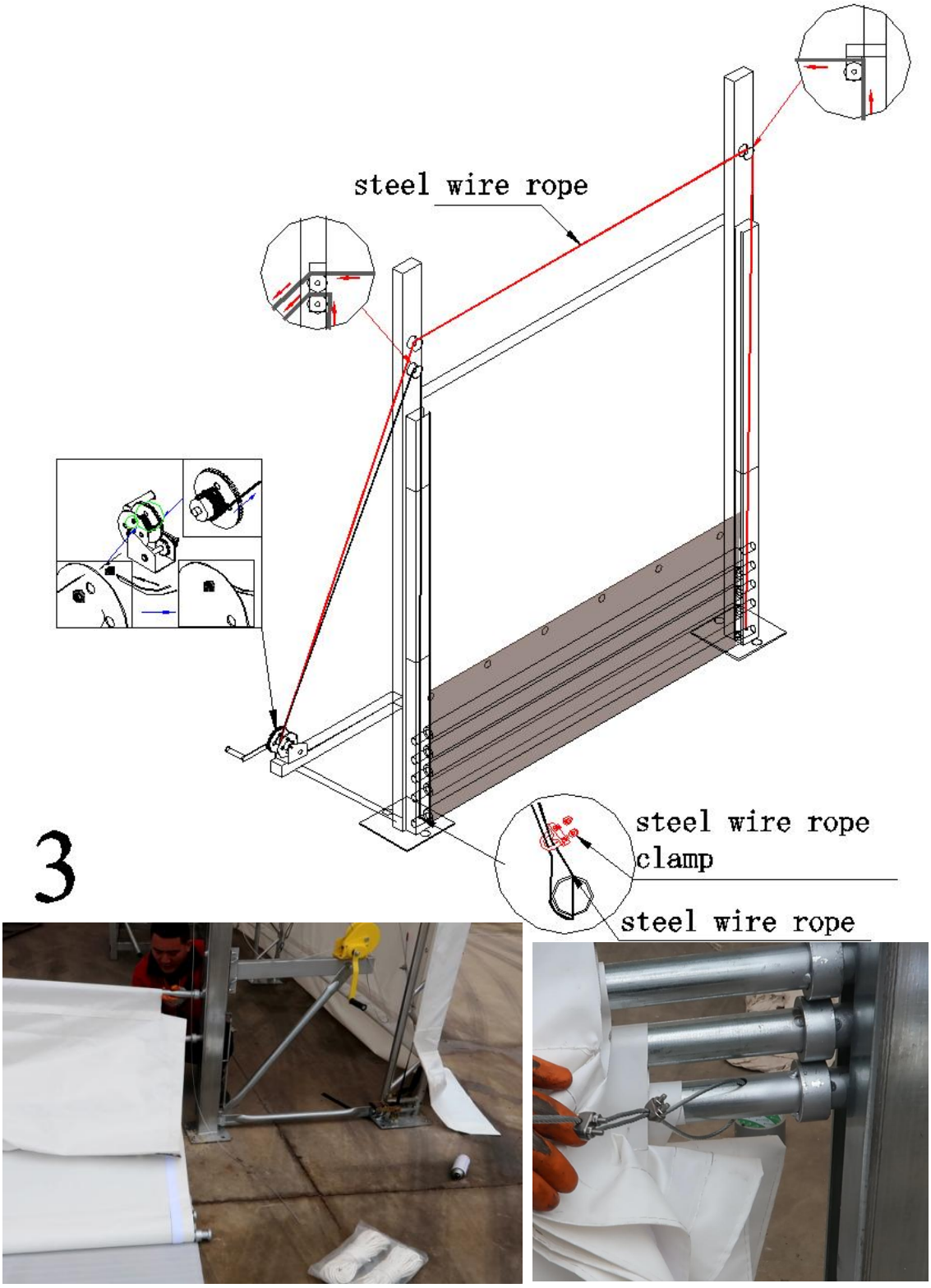
steel wire rope
3
steel wire rope
clamp
steel wire rope

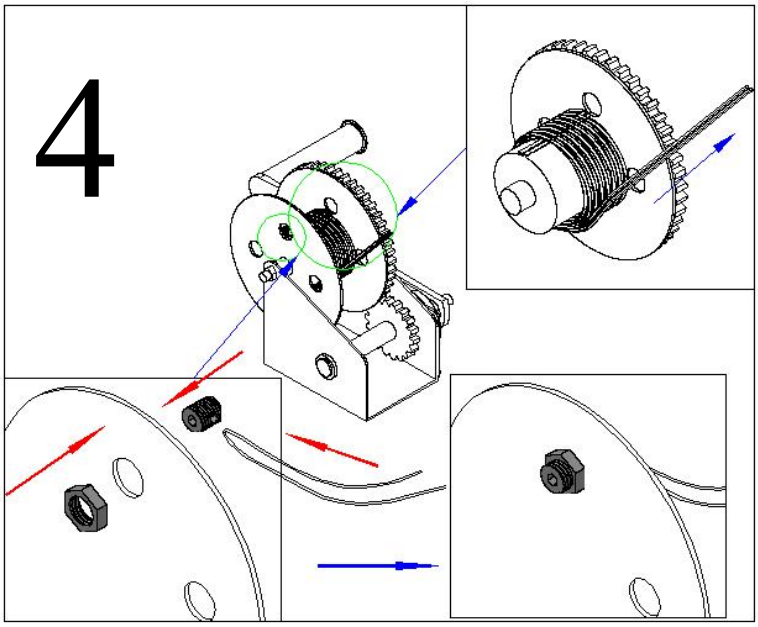
4

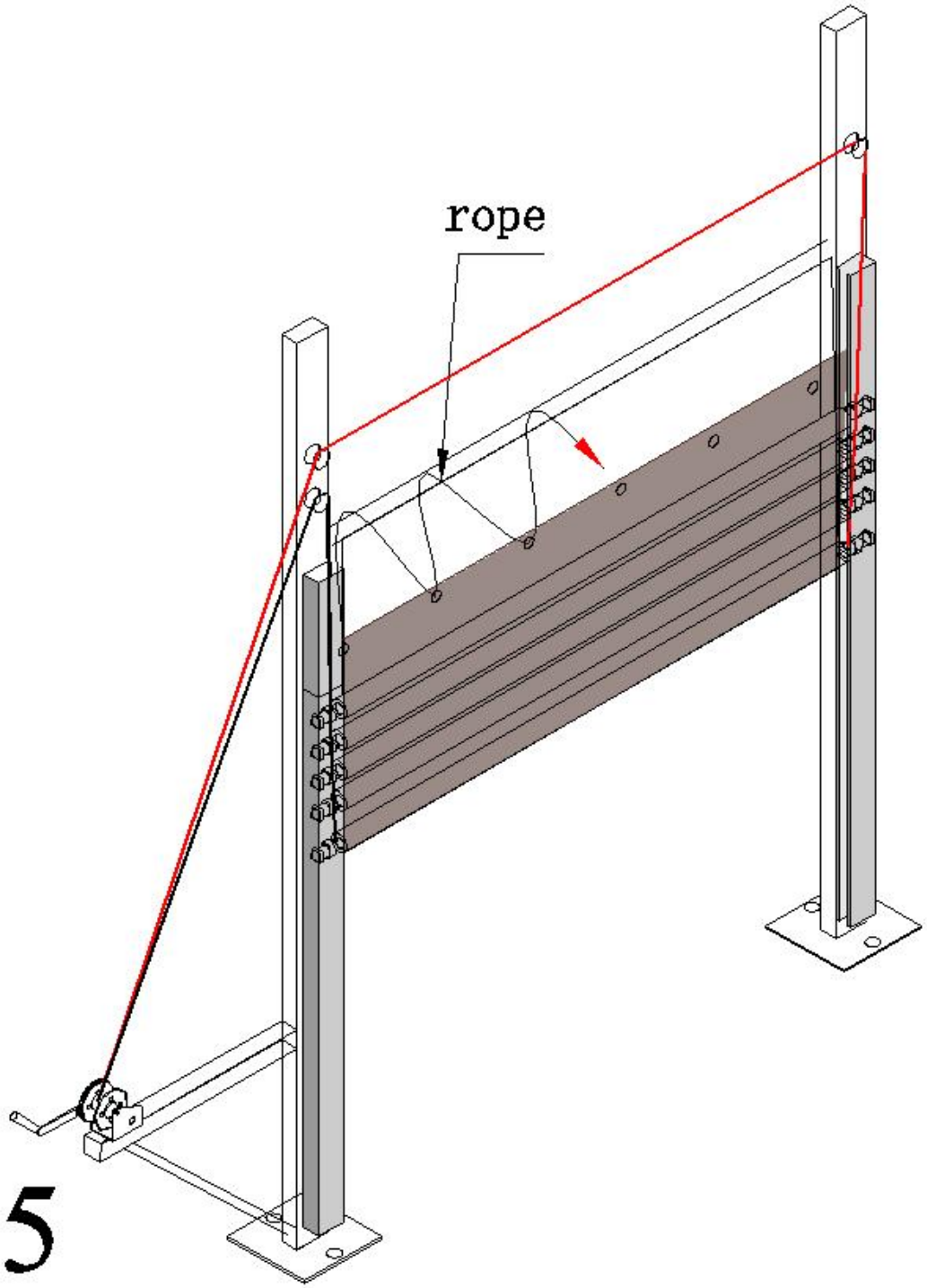
rope
5

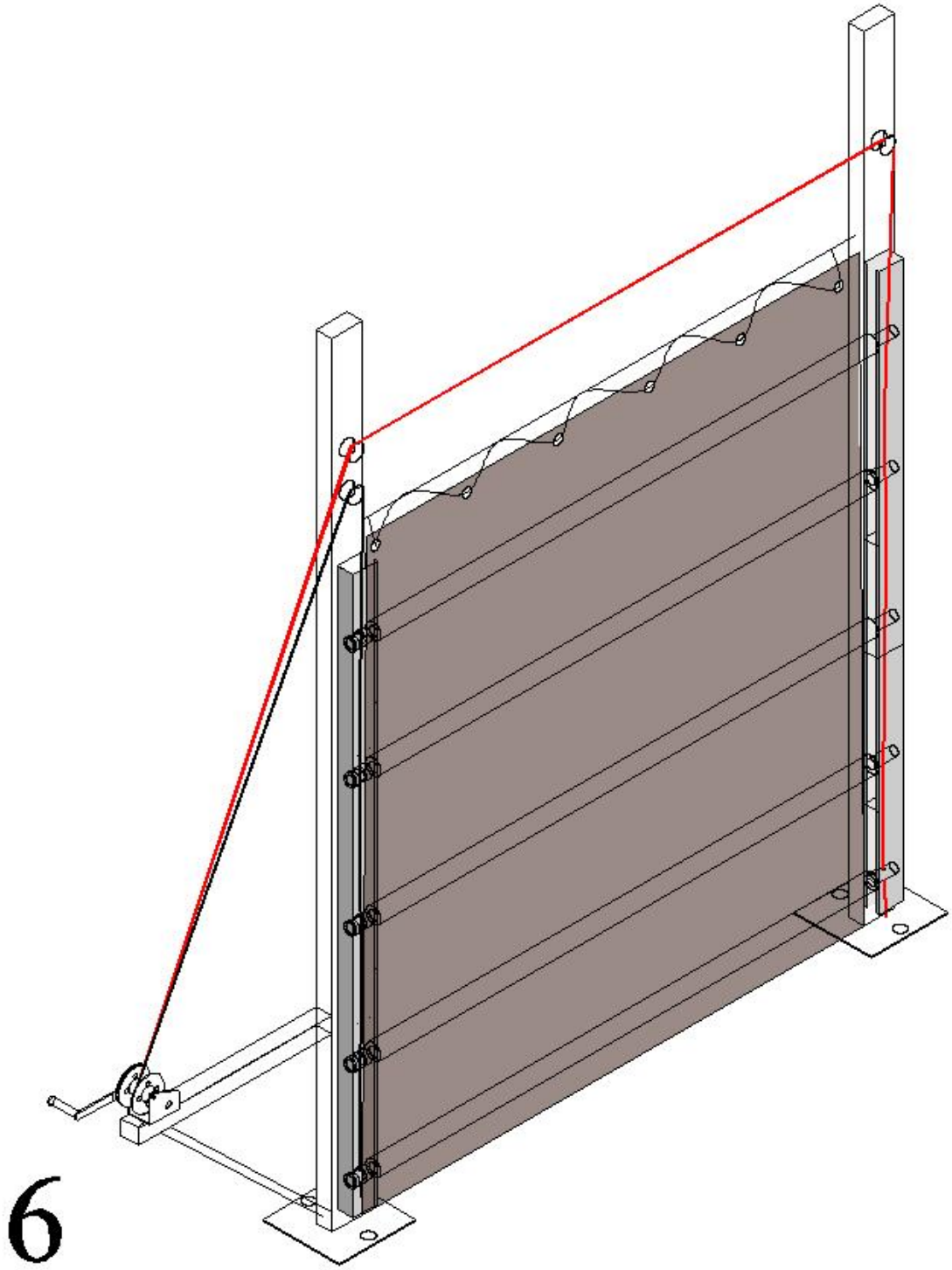

6

8. Front Panel Cover Installation

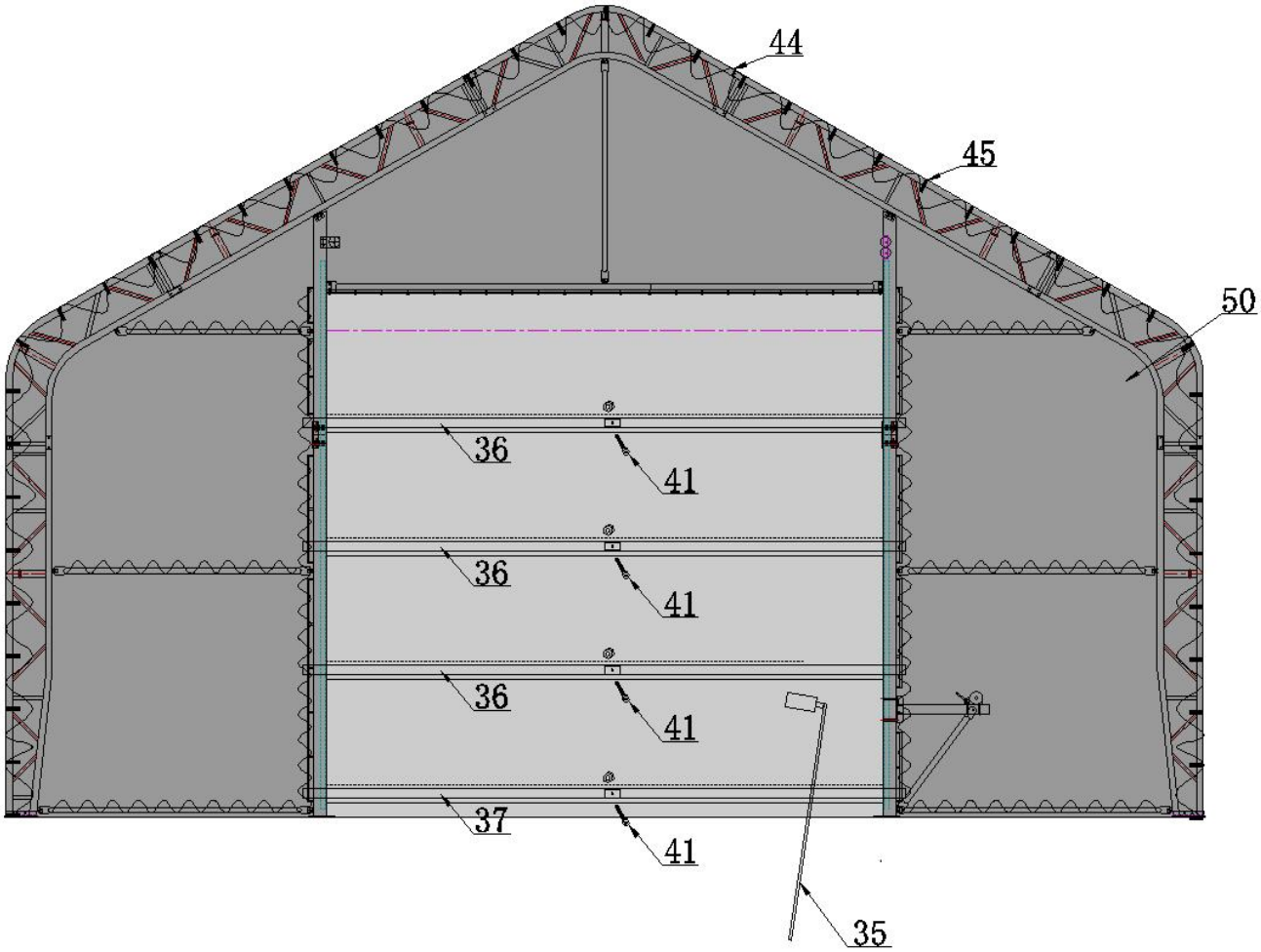

Figure.9

9. Back Panel Cover Installation

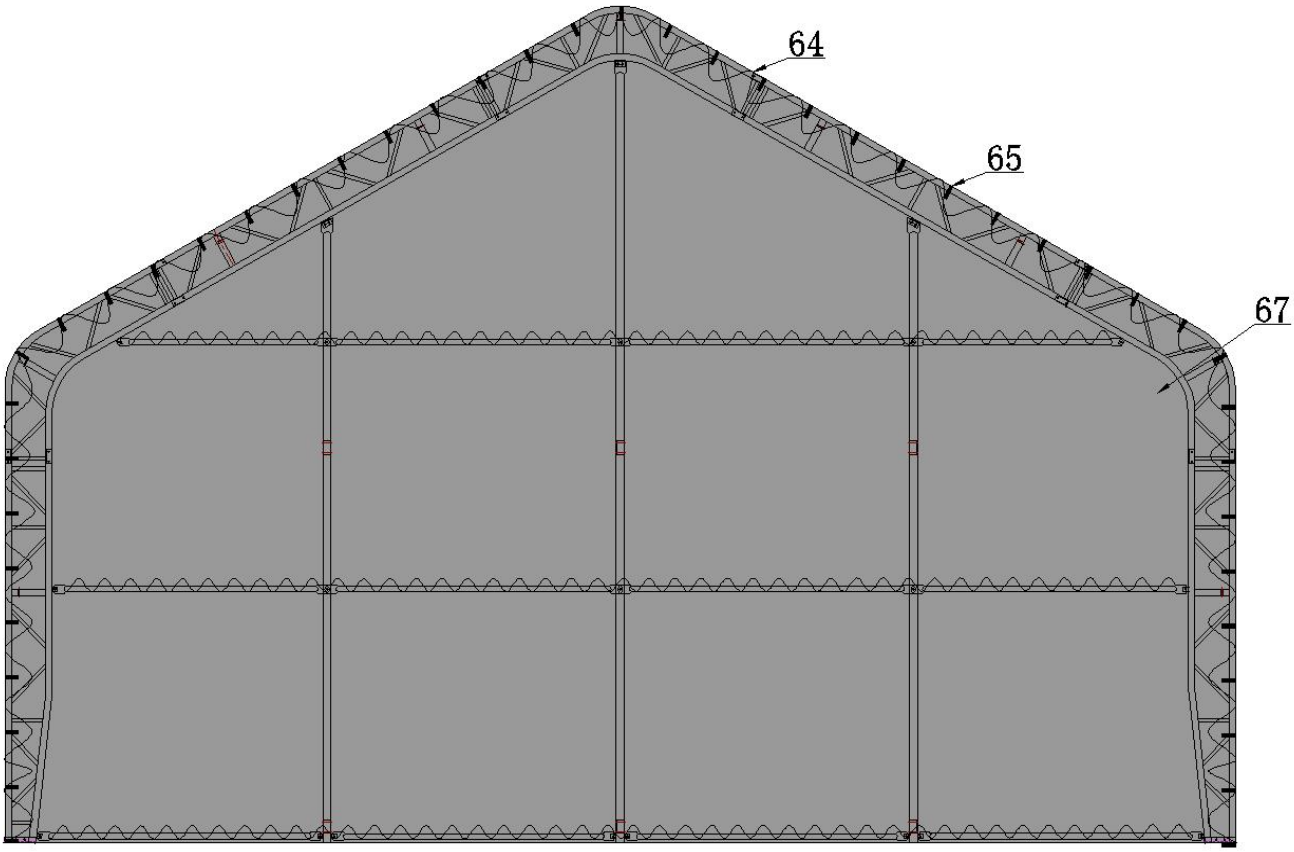

Figure.10

10. Roof Cover Installation

1. Put the Roof Cover EVENLY, CAREFULLY AND SLOWLY on the frame. Insert the Tensioning Tubes (No.9) into the cover pipe pockets and loosely secure the Belt (No.15) in the winch on based plate square tube. DO NOT TIGHTEN. Adjust the cover so that it is square and evenly centered on the frame.

Note: The end flaps must overhang evenly at both ends.

2. When roof cover is tidy and ready, drive the ratchet on base plate tie down forth and back and then roof cover is tightened in the vertical direction.

Note: DO NOT LEAVE COVER UNATTACHED UNDER ANY CIRCUMSTANCES.

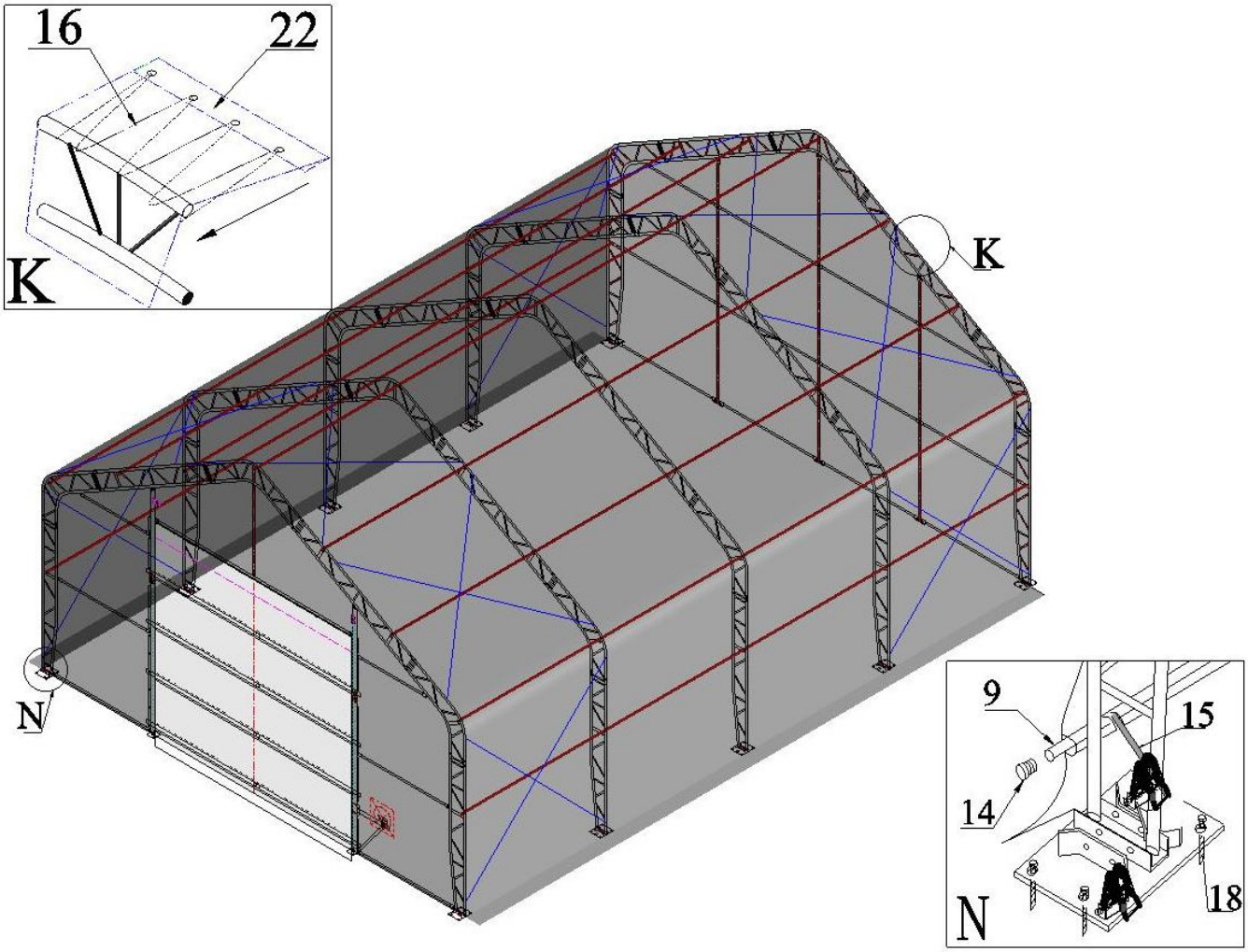

Figure.11

Now your assembly is completed.

<u>Tie down all ratchets from time to time to keep tarp tight all the time.</u>