SHELTER ASSEMBLY MANUAL
Model#205016P
W6.1m*L15.26m*H4.88m

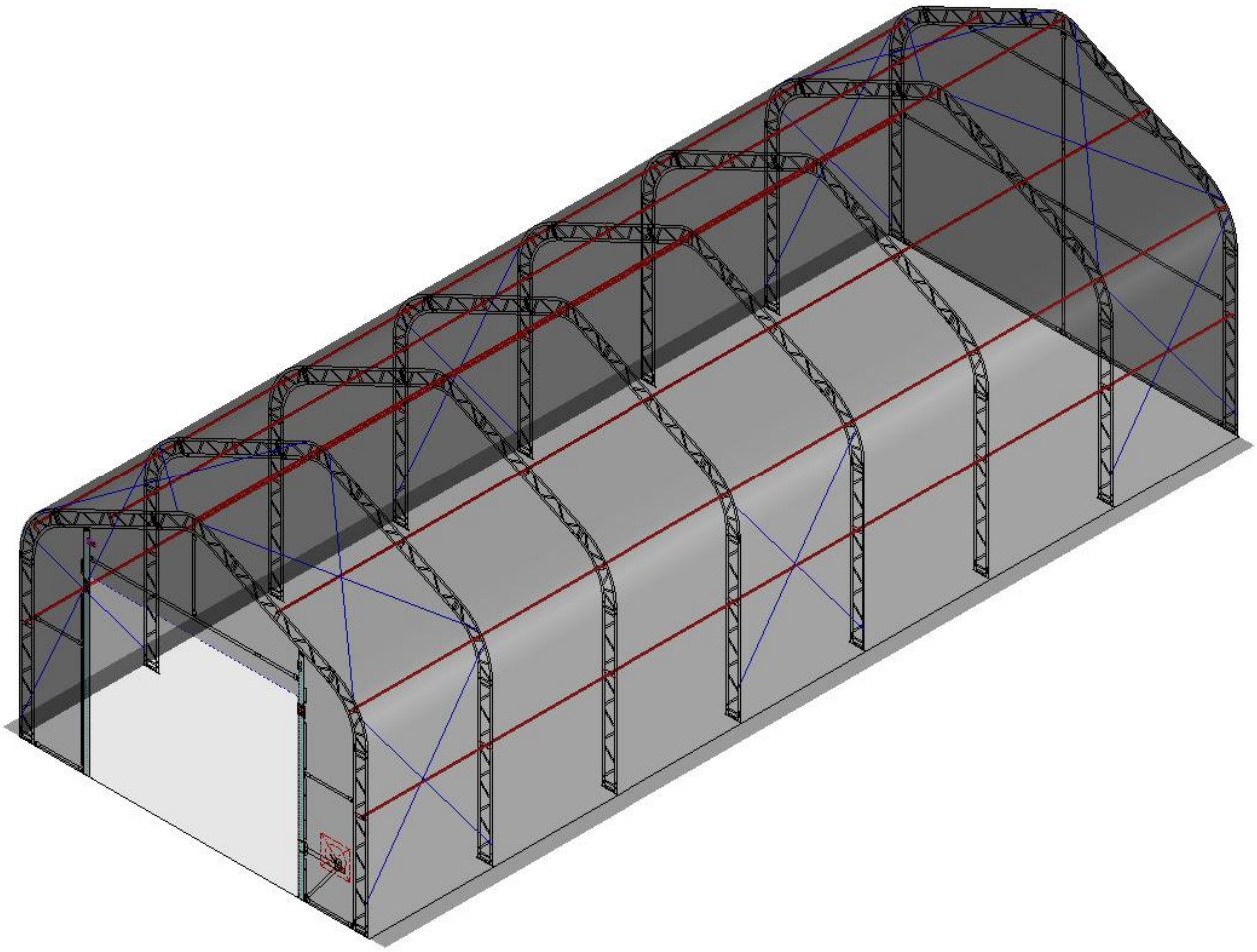

RECOMMENDED TOOLS

Equipment List

Speed Wrench 22#.23#.24#	
Hammer (30lb)	
Rope (12#)	
Long Tape (50m)	
Hammer Drill*1	
Lifter*2	
Crane*1	
Forklift*1	
Protective equipment	

YOU MUST READ THIS DOCUMENT BEFORE YOU BEGIN TO ASSEMBLE THE SHELTER.

Thank you for purchasing our shelter. When properly assembled and maintained, this product will provide years of reliable service. These instructions include helpful hints and important information needed to safely assemble and properly maintain the shelter. Please read these instructions ***before*** you begin.

If you have any questions during the assembly, please contact local dealer for assistance.

SAFETY PRECAUTIONS

. Wear eye protection.
. Wear head protection
. Wear gloves when handling metal tubes
. Use a portable GFCI (Ground Fault Circuit Interrupter) when working with power tools and cords.
. Do not climb on the shelter or framing during or after construction.
. Do not occupy the shelter during high winds, tornadoes, or hurricanes.
. Provide adequate ventilation if the structure is enclosed.
. Do not store hazardous materials in the shelter.
. Provide proper ingress and egress to prevent entrapment.

ANCHORING INSTRUCTIONS

Prior to assembling this shelter, please read the ***MUST READ*** document included with the shipment.

⚠**WARNING:** The anchor assembly is an integral part of the shelter construction. Improper anchoring may cause shelter instability and failure of the structure. Failing to anchor the shelter properly ***will void the manufacturer's warranty*** and may cause serious injury and damage.

LOCATION

Choosing the proper location is an important step before you begin to assemble the structure.

The following suggestions and precautions will help you determine whether your selected location is the best location.

. Never erect the structure under power lines.
. Identify whether underground cables and pipes are present ***before*** preparing the site or anchoring the structure.
. Location should be away from structures that could cause snow to drift on or around the building
. Do not position the shelter where large loads such as snow and ice, large tree branches, or other overhead obstacles could fall.
. Your shelter's cover can be quickly removed and stored prior to severe weather conditions. If strong winds or severe weather is forecast in your area, we recommend removal of cover.

SITE

After choosing a location, proper preparation of the site is essential. The following site characteristics will help ensure the integrity of the structure.

. The support structure must be level to properly and safely erect and anchor the frame.
. Drainage: Water draining off the structure and from areas surrounding the site should drain away from the site to prevent damage to the site, the structure, and contents of the structure.

⚠**WARNING:** The individuals assembling this structure are responsible for designing and furnishing all temporary bracing, shoring and support needed during the assembly process. For safety reasons, those who are not familiar with recognized construction methods and techniques ***must seek the help of a qualified contractor.***

PART LIST Roof Section			
Code	Description		QTY
1	Roof Top Arch	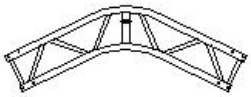	6
1A	Roof Top Arch for Front Panel	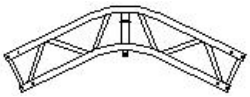	1
1B	Roof Top Arch for Back Panel	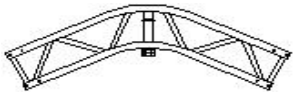	1
2	Roof Curve Arch	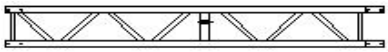	12
2A	Roof Curve Arch for Front&Back Panel	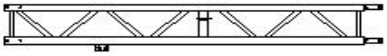	2
2B	Roof Curve Arch for Back Panel	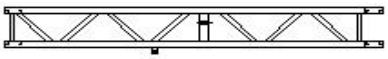	2
3	Shoulder Arch		16
4	Standing Arch	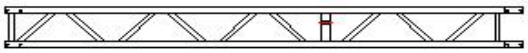	12
4A	Standing Arch for Front&Back Panel	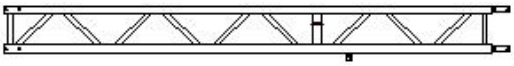	4
5	Purlin		49
6	Connector		20
7	Base plate for Four Corners	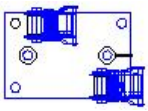	4

8	Interior Base Plate	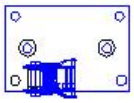	12
9	Tensioning Tube for Roof Cover	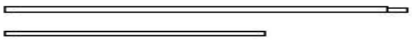	10pcs long 2pcs short
10	Clip	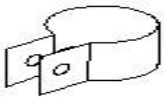	40
11	M8*50 Hexagon Bolt		256
12	M10*70 Hexagon Bolt	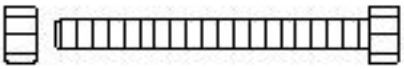	56
13	Plastic Cap		4
14	Band for Tiedown Ratchet on Base Plate	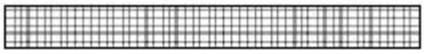	16
15	Rope		1bag
16	Roof Cover		1
17	Anti-wear Tape	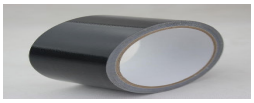	2
18	Stake Peg	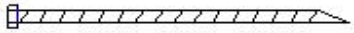	64
19	Turnbuckle		20
20	Buckle		40
21	Steel Wire		20

Front and Back Panel Section			
22	Left Lower Standing Square Tube for Front Door		1
23	Right Lower Standing Square Tube for Front Door		1
24	Left Upper Standing Square Tube for Front Door		1
25	Right Upper Standing Square Tube for Front Door		1
26	Connector for Upper and Lower Square Tube		2sets
27	Lower Standing Leg for Back Panel		1
28	Upper Standing Leg for Back Panel		1
29	Base Plate for Back Panel		1
30	Door Beam for Front Door		1set
30A	Bar for Door Beam		1
31	Rail for Front Door		4
32	Upper Rail for Back Panel		2
33	Middle Rail for Back Panel		2
34	Lower Rail for Back Panel		2
35	Supporting Rail for Hand Winch		1
36	Bracing for Part#35		1
37	Pole for Helping Front Door Cover		1

38	Door Drop Tube		3sets
39	Bottom Door Drop Tube		1set
40	M8*70 Hexagon Bolt		6
41	M10*80 Carriage Bolt		2
42	M10*30 Hexagon Bolt		22
43	M10*50 Hexagon Bolt		6
44	M6*45 Hexagon Bolt		4
45	M12*130 Hexagon Bolt		10
46	M10*70 Hexagon Bolt		9
47	Rope for Tensioning Front and Back Panel		2bags
48	Zap Strap		60
49	Stake Peg		12
50	Steel Wire for Hand Winch		1boundle
51	Clip		4sets
52	Hand Winch		1
53	Front&Back Cover		2

1.Base Plate Foundation

1. Please refer to the diagram (Figure 1) to mark the position of base plates.

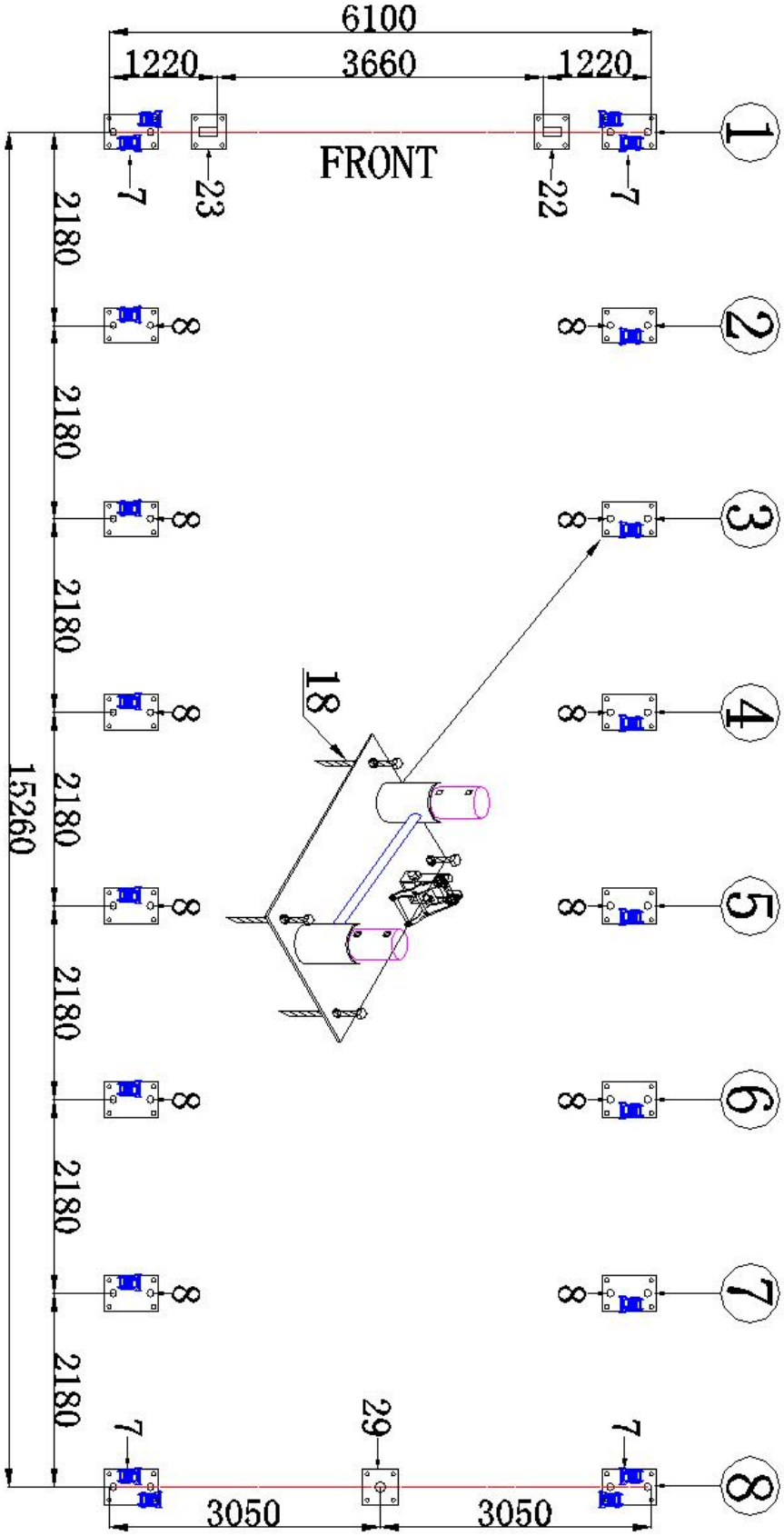

Figure. 1

2. Front Arch Installation (Arch No.1)

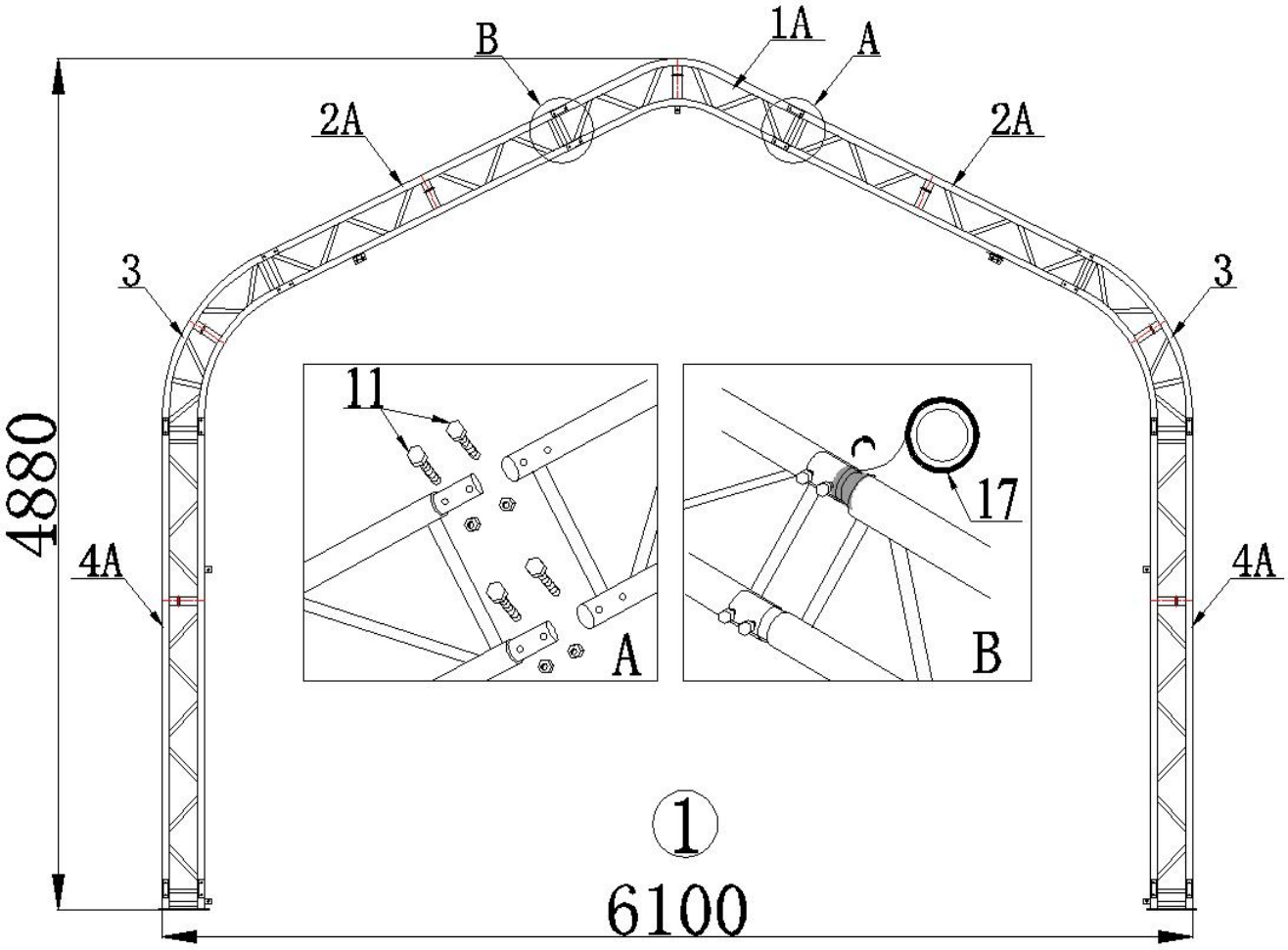

Figure.2

1. Connect Arch (No.1A, 2A, 3, 4A) by bolt M8x50 (No.11) to be whole FRONT panel arch.
2. Put Standing Leg (No.4A) into the Base Plate (No.7) and fix it by bolt M8x50 (No.11), then same for the opposite base plate.
3. Stick Anti-wear tape (No.17) at the joints of arches to avoid tearing of roof cover.

3. Interior Arch Installation (Arch No.2, 3, 4, 5, 6, 7)

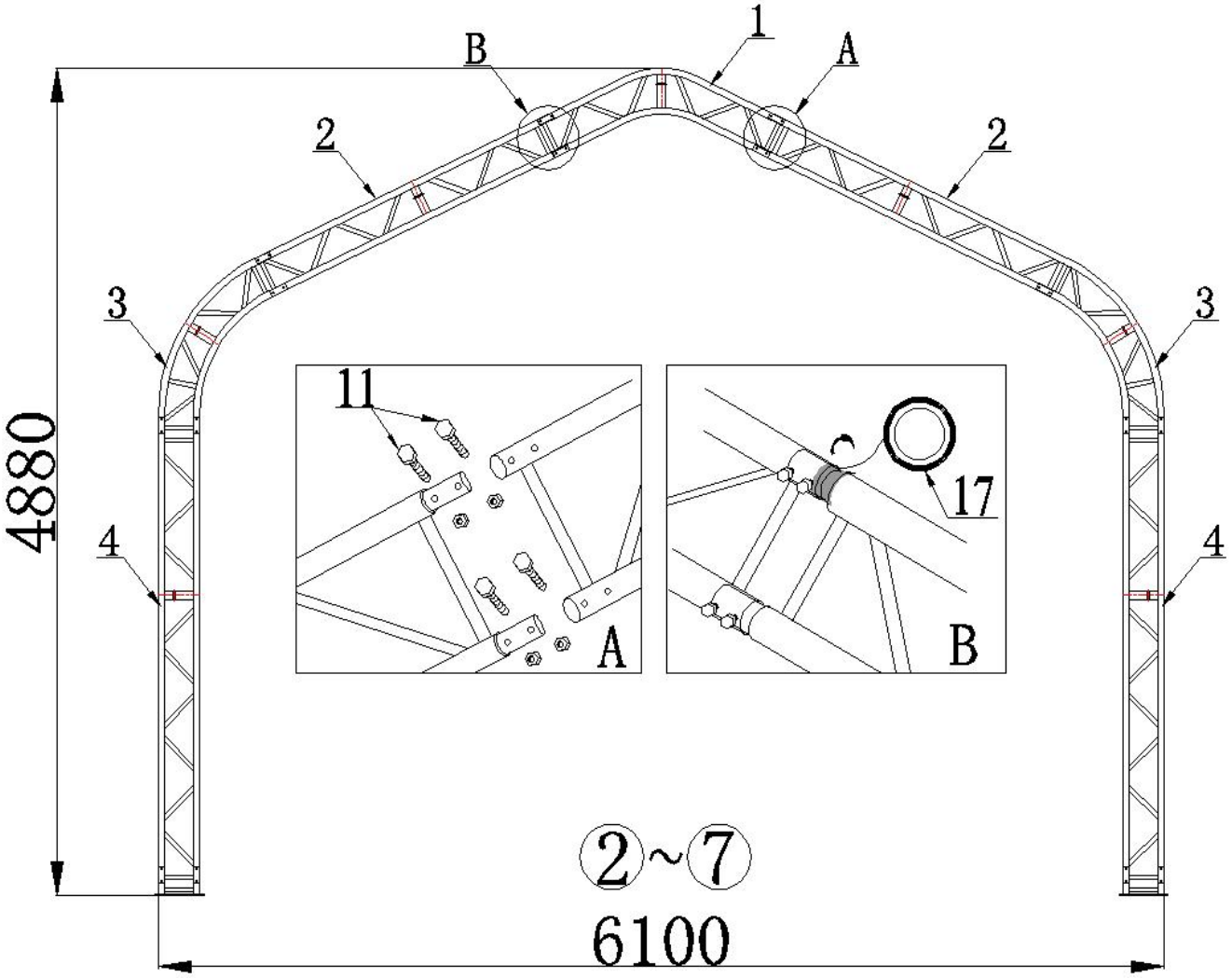

Figure.3

1. Connect Arch (No.1, 2, 3, 4) by bolt M8x50 (No.11) to be whole INTERIOR panel arch.
2. Put Standing Leg (No.4) into the Base Plate (No.8) and fix it by bolt M8x50 (No.11), then same for the opposite base plate.
3. Stick Anti-wear tape (No.17) at the joints of arches to avoid tearing of roof cover.

4. Back Arch Installation (Arch No.6)

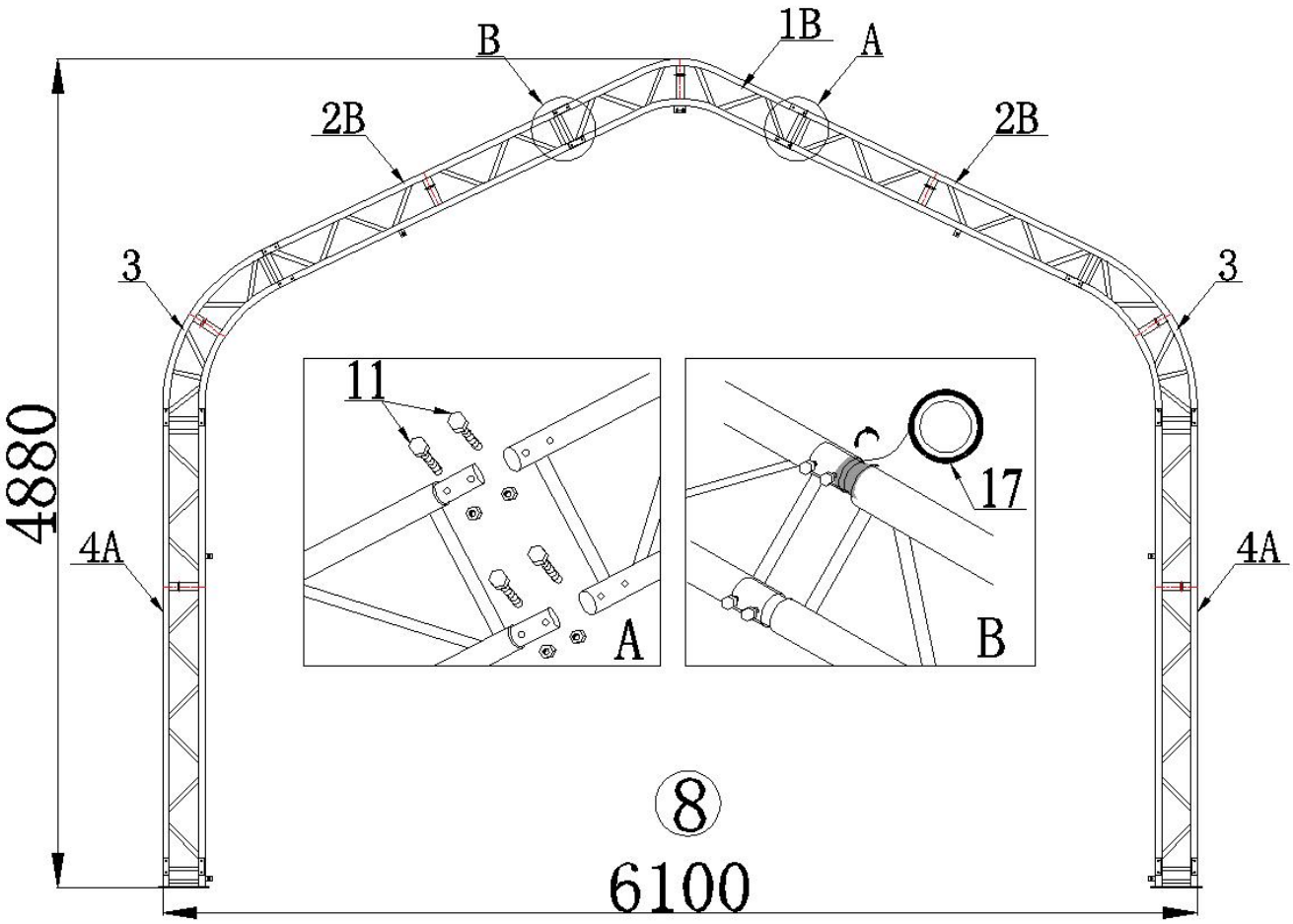

Figure.4

1. Connect Arch (No.1B, 2B, 3, 4A) by bolt M8x50 (No.11) to be whole BACK panel arch.
2. Put Standing Leg (No.4A) into the Base Plate (No.7) and fix it by bolt M8x50 (No.11), then same for the opposite base plate.
3. Stick Anti-wear tape (No.17) at the joints of arches to avoid tearing of roof cover.

5. Front Panel Installation (Arch No.1)

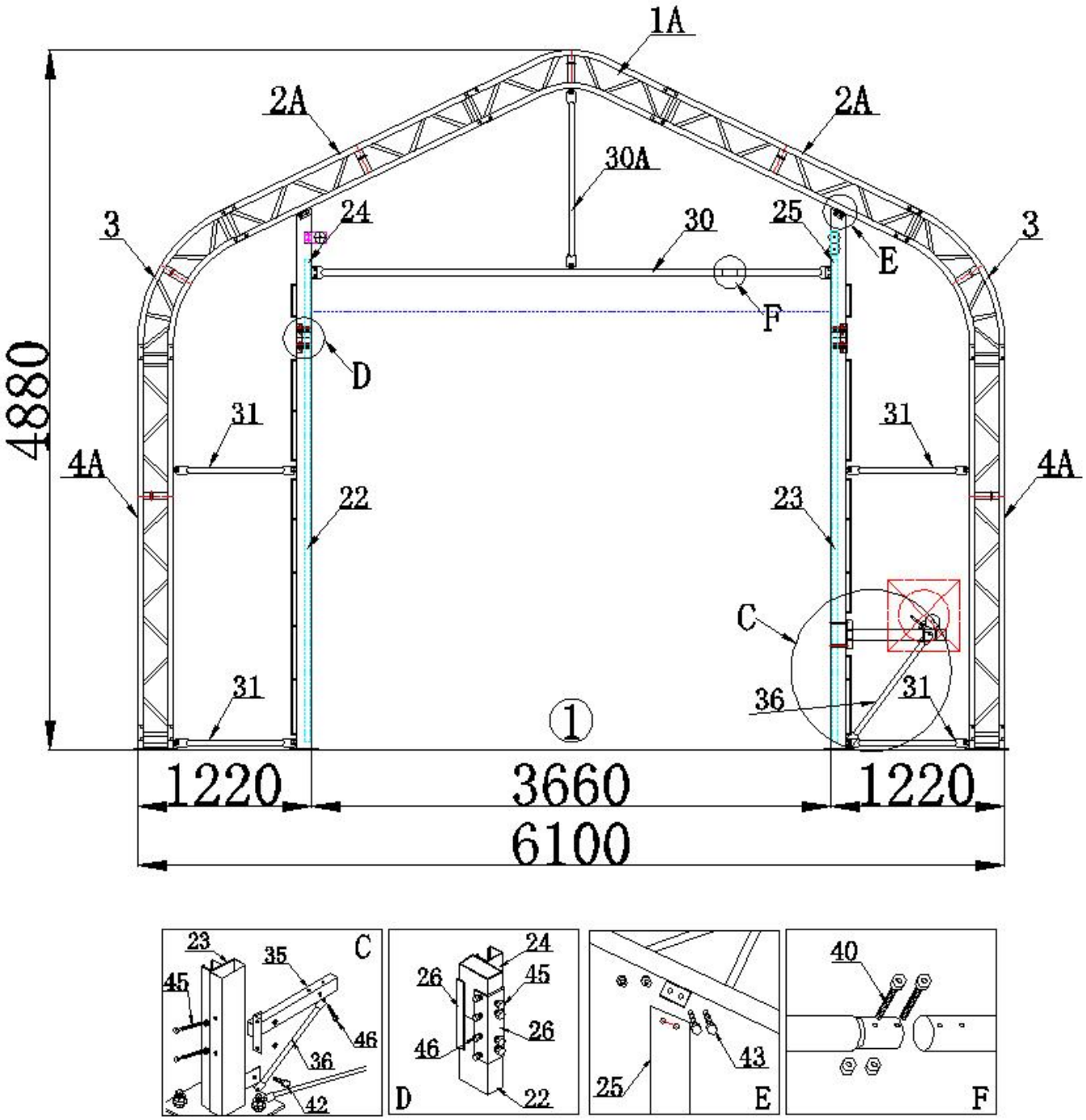

Figure.5

6. Back Panel Installation (Arch No.8)

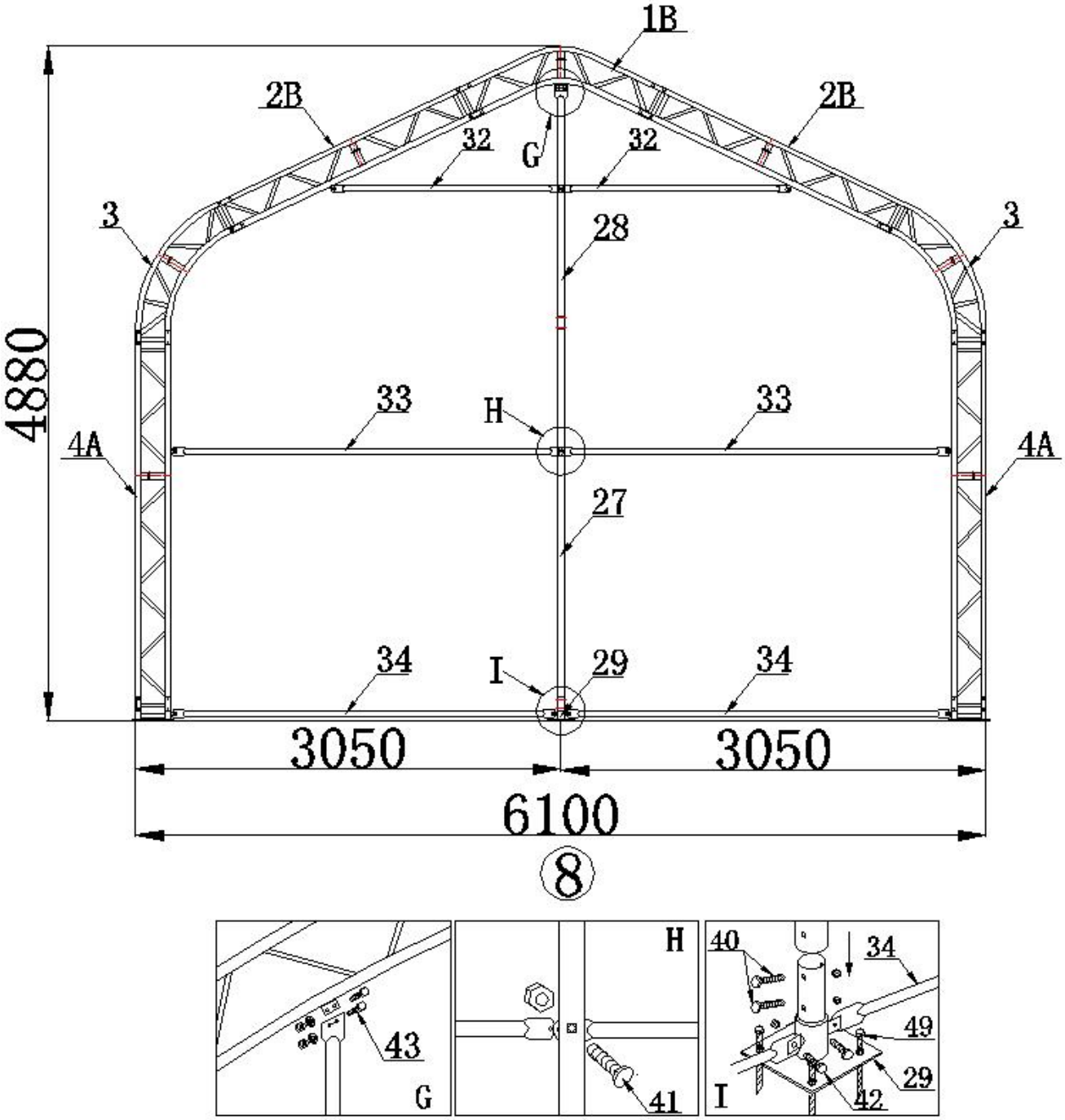

Figure.6

7. Purlin and Cross Steel Wire Installation

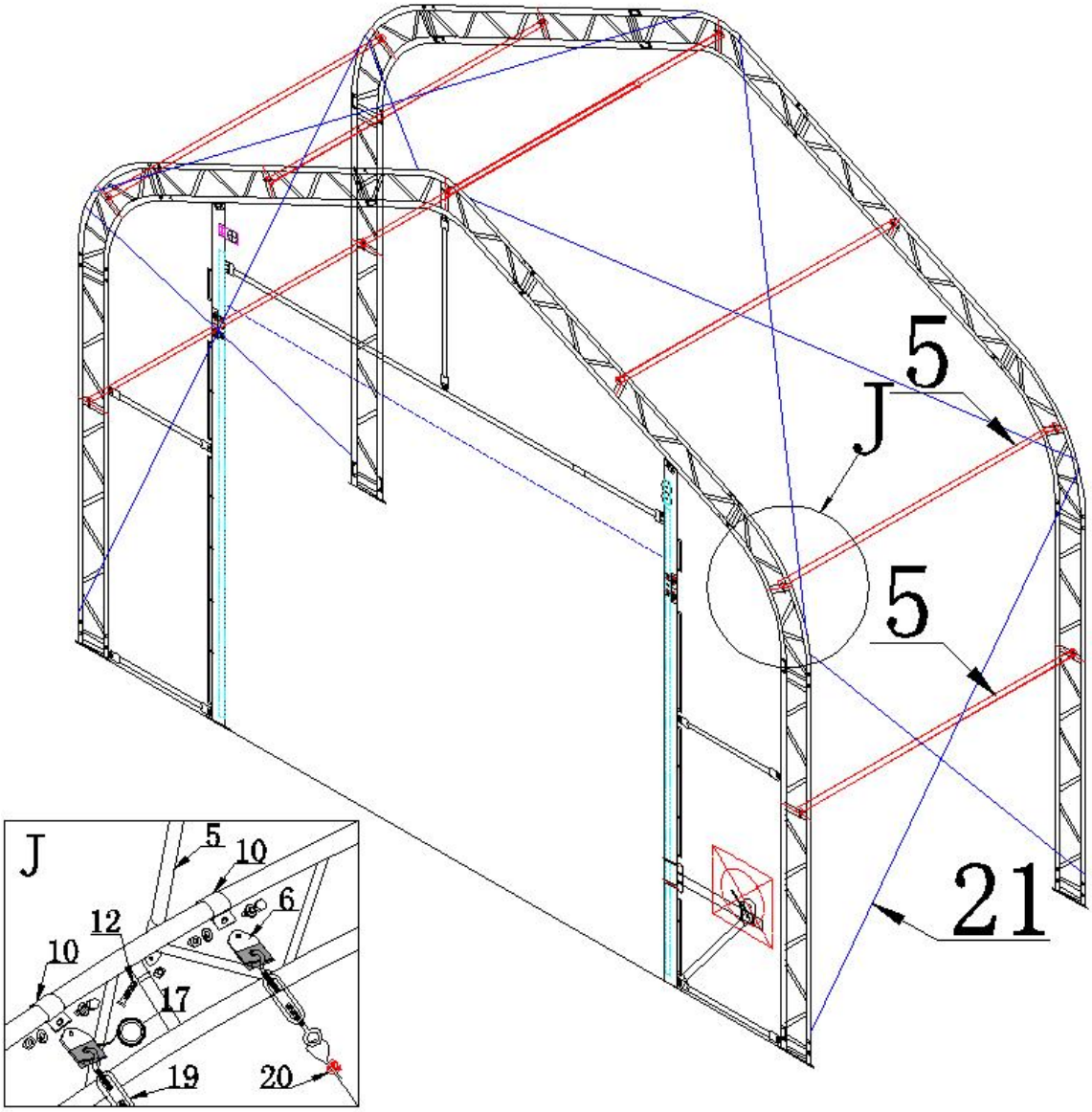

Figure.7

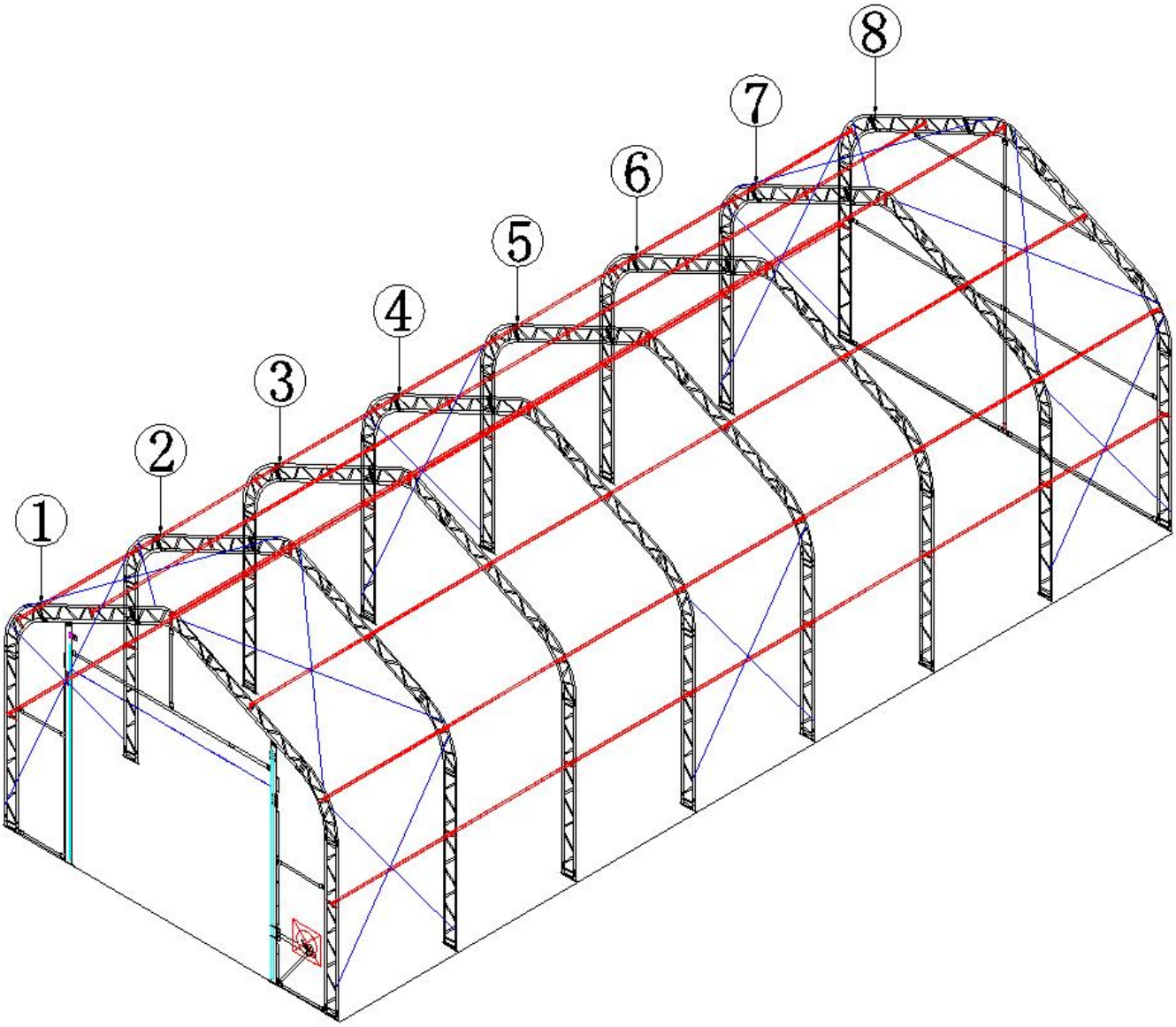

Figure.8

8. Mechanical Winch Door Installation

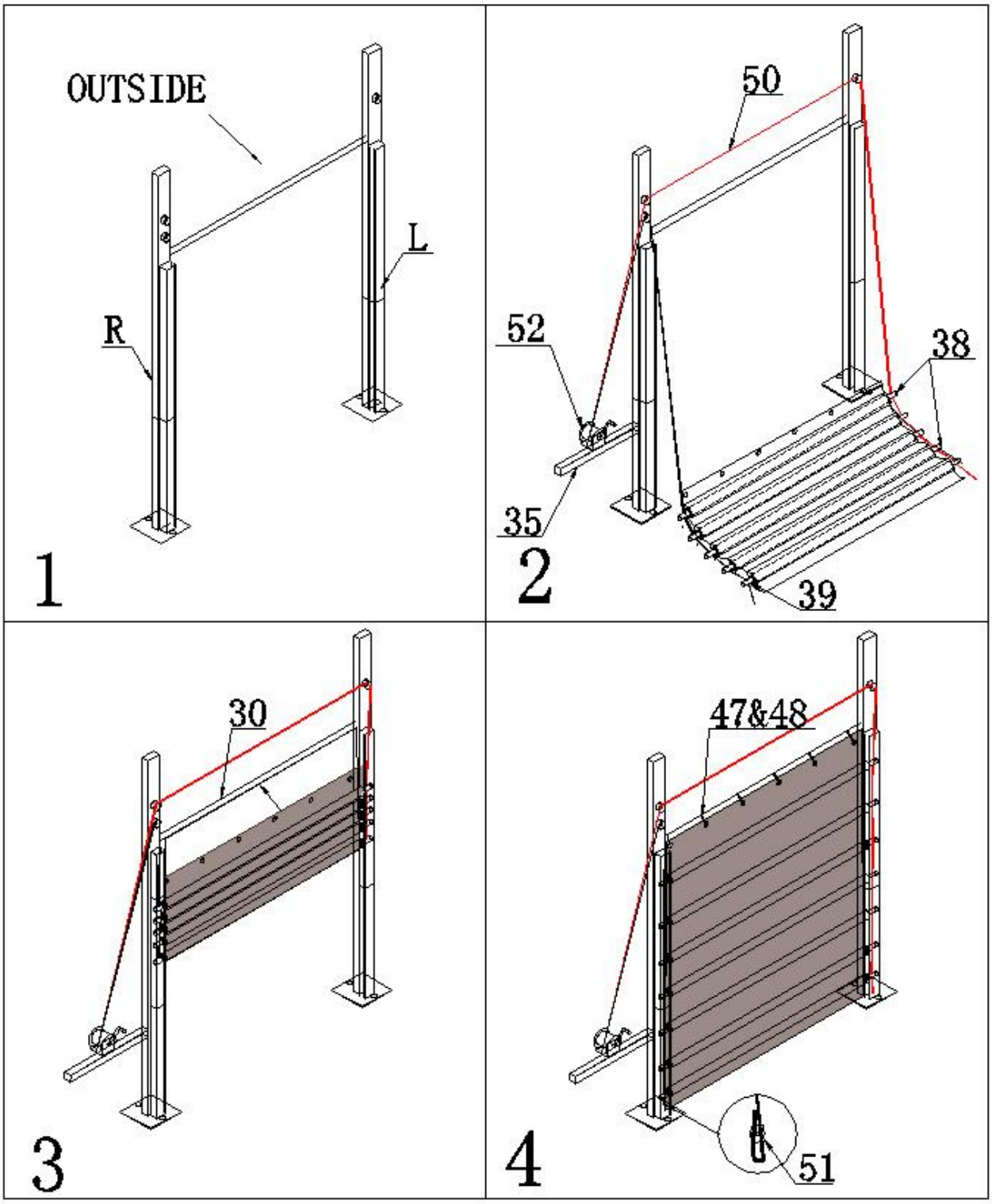

Figure.9

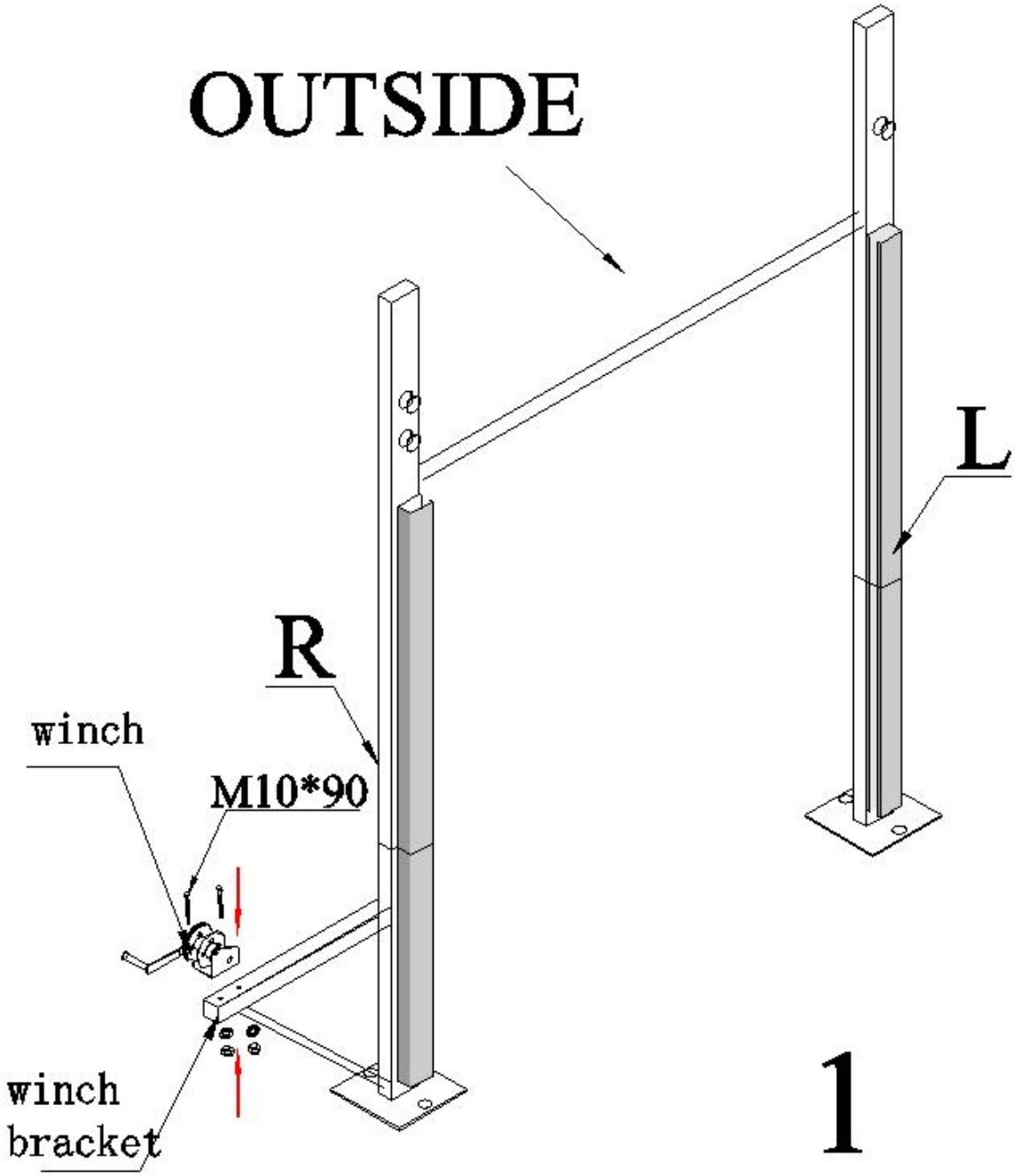
OUTSIDE
L
R
winch
M10*90
winch
bracket
1

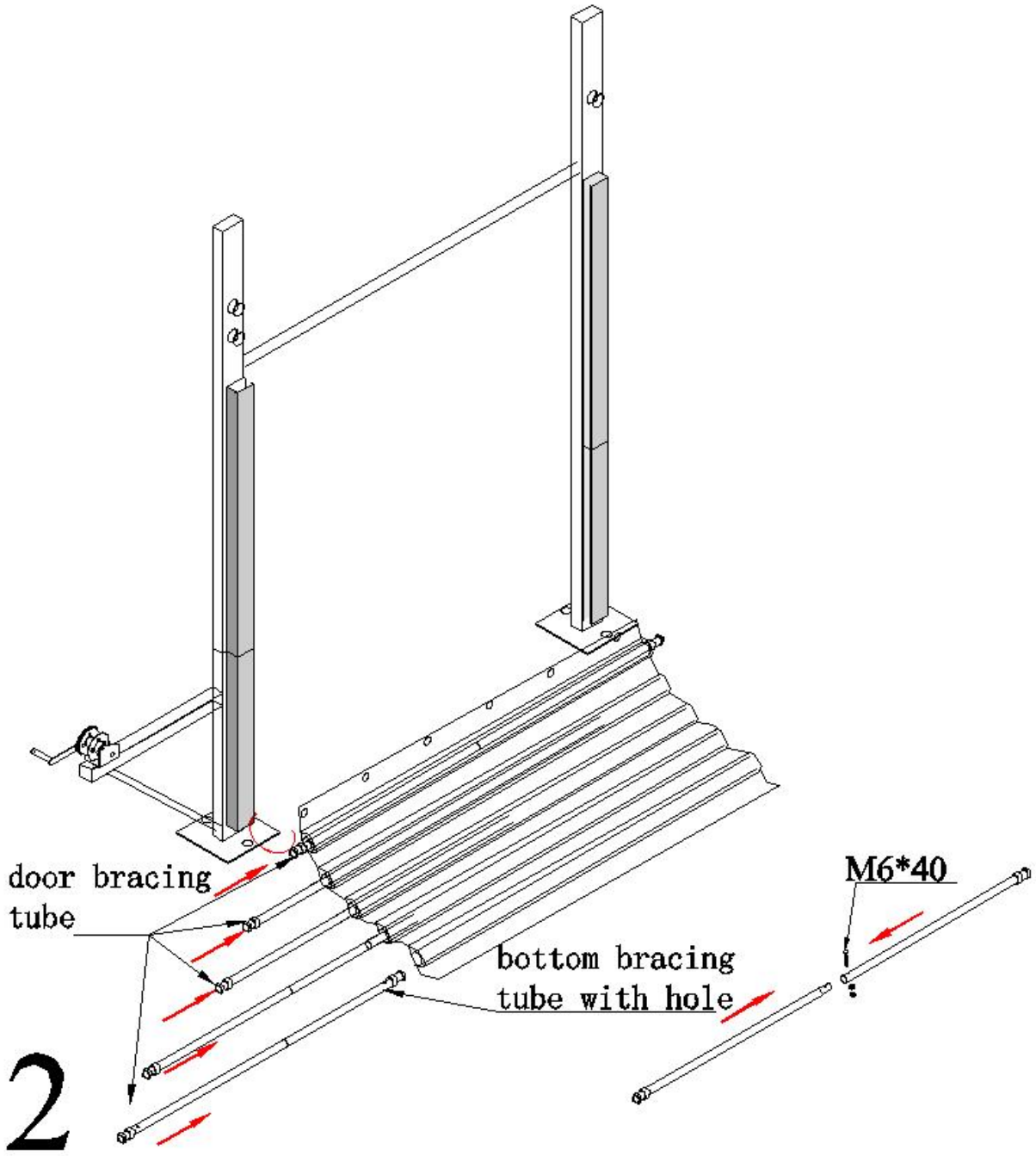
door bracing
tube
M6*40
bottom bracing
tube with hole
2

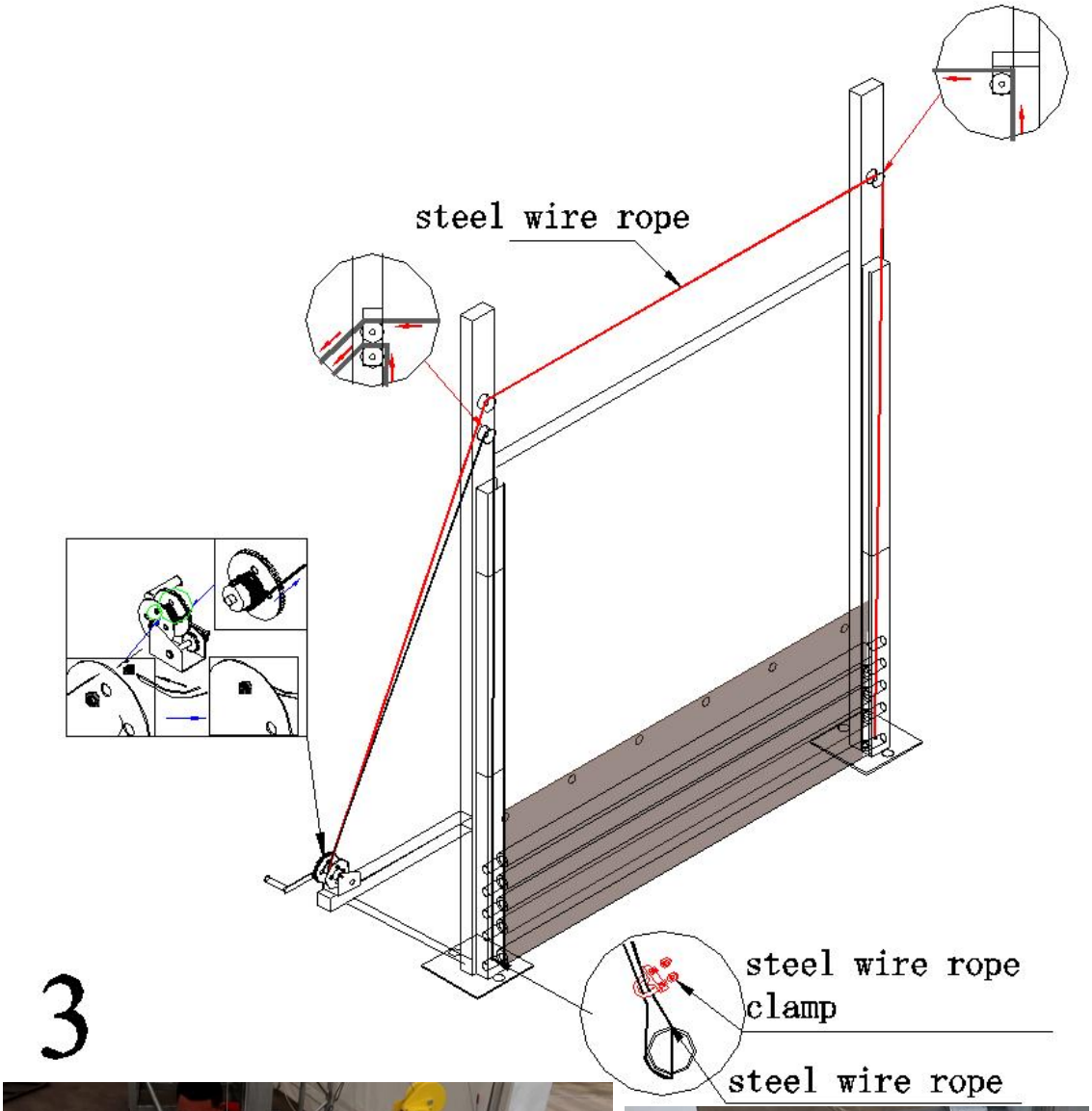

3

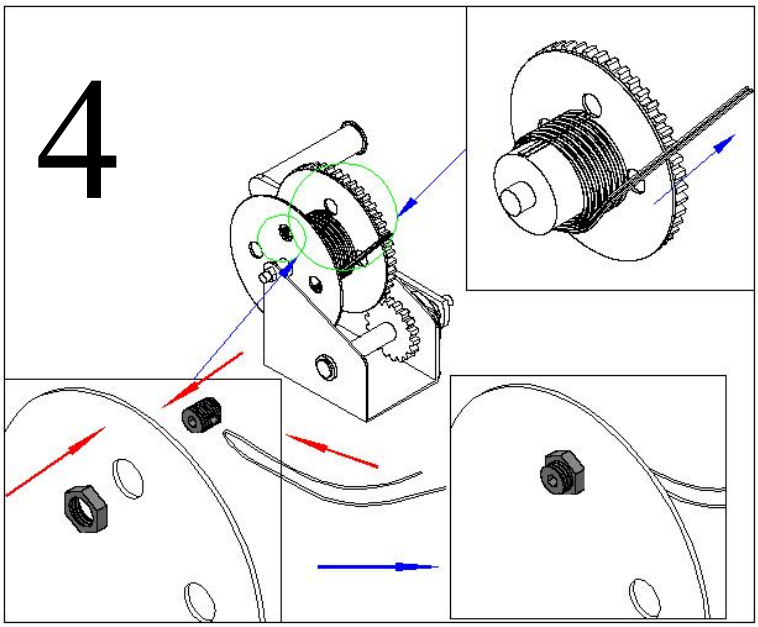
4

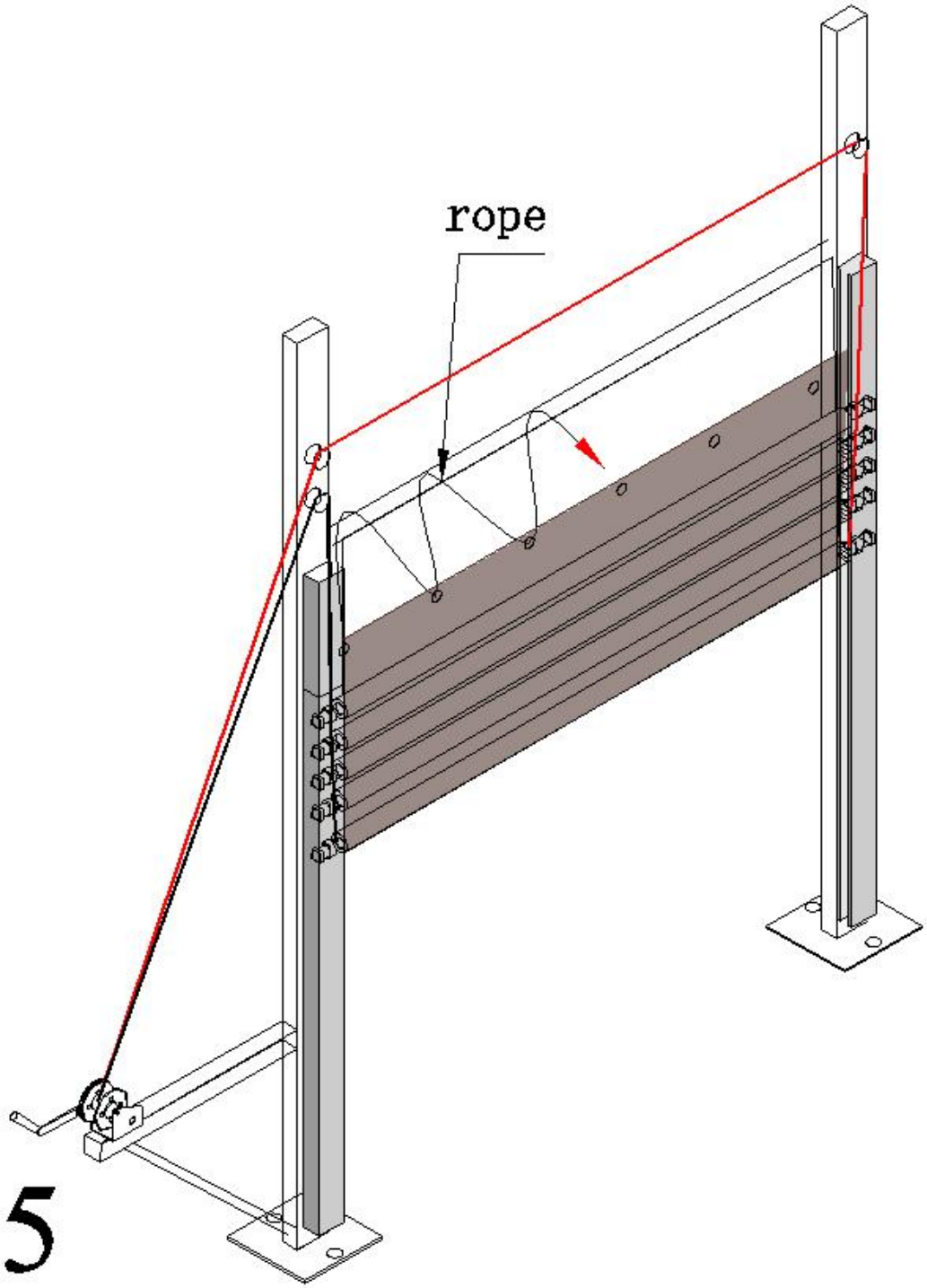
rope
5

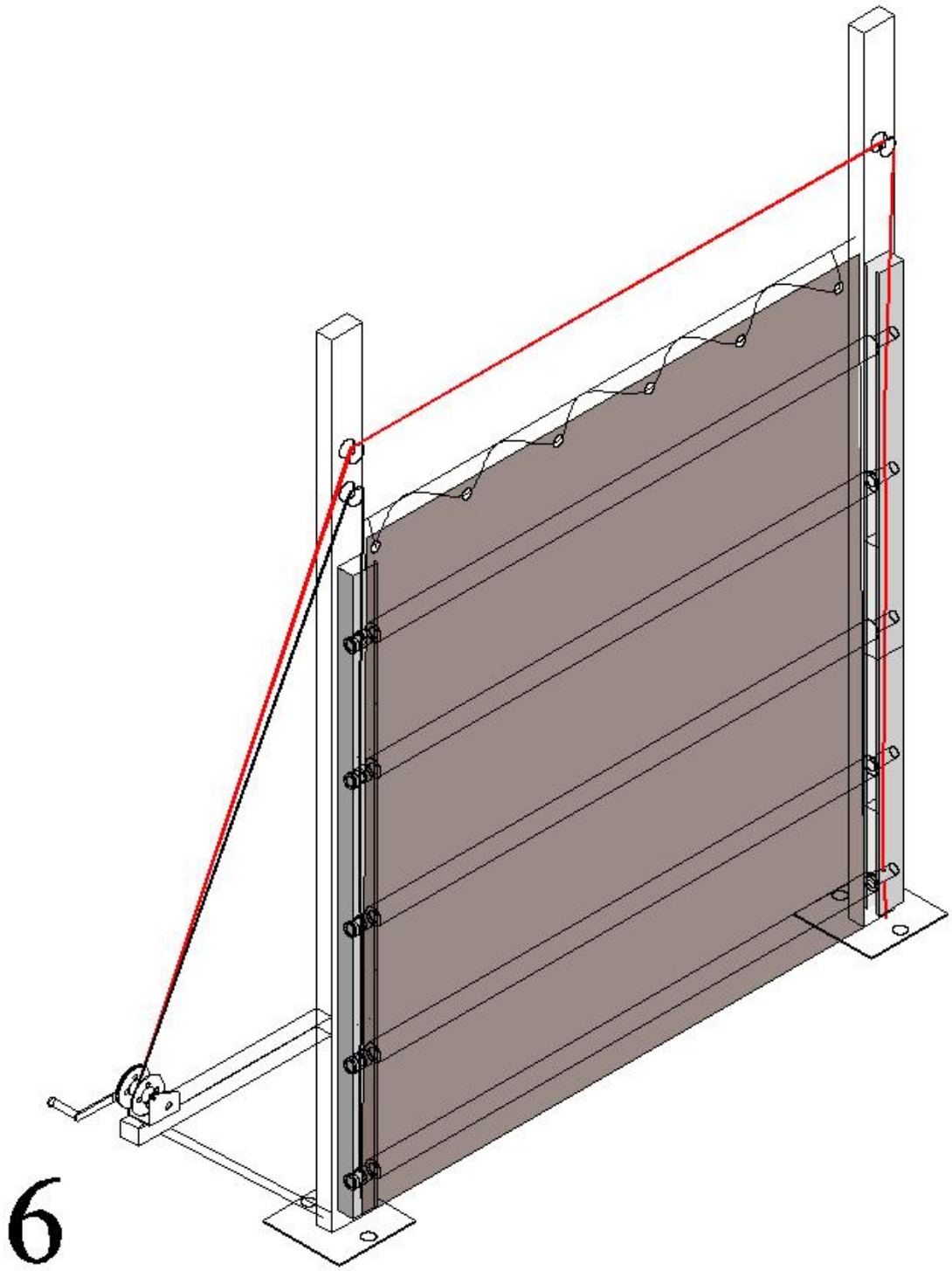
6

9. Front Panel Cover Installation

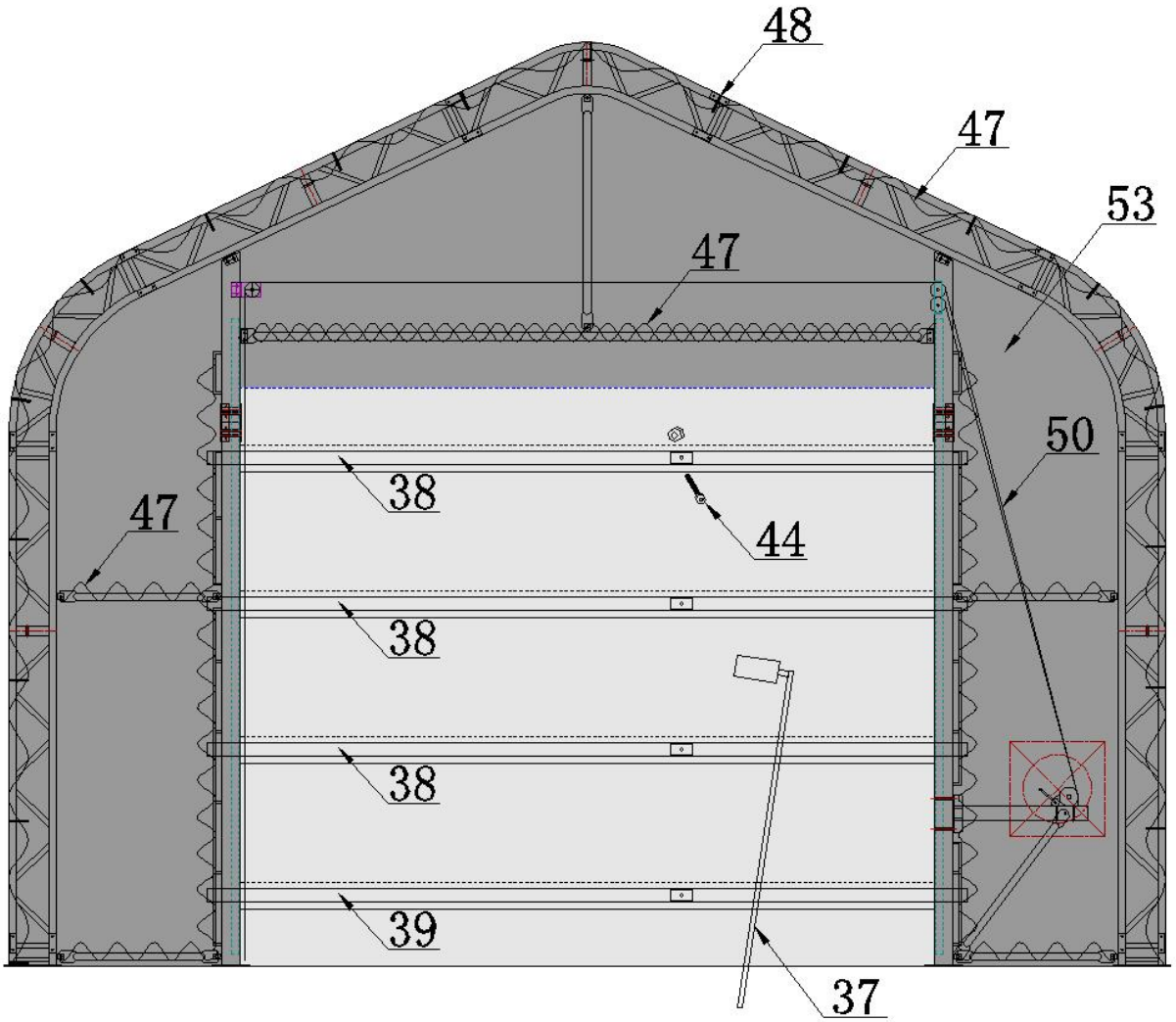

Figure.10

10. Back Panel Cover Installation

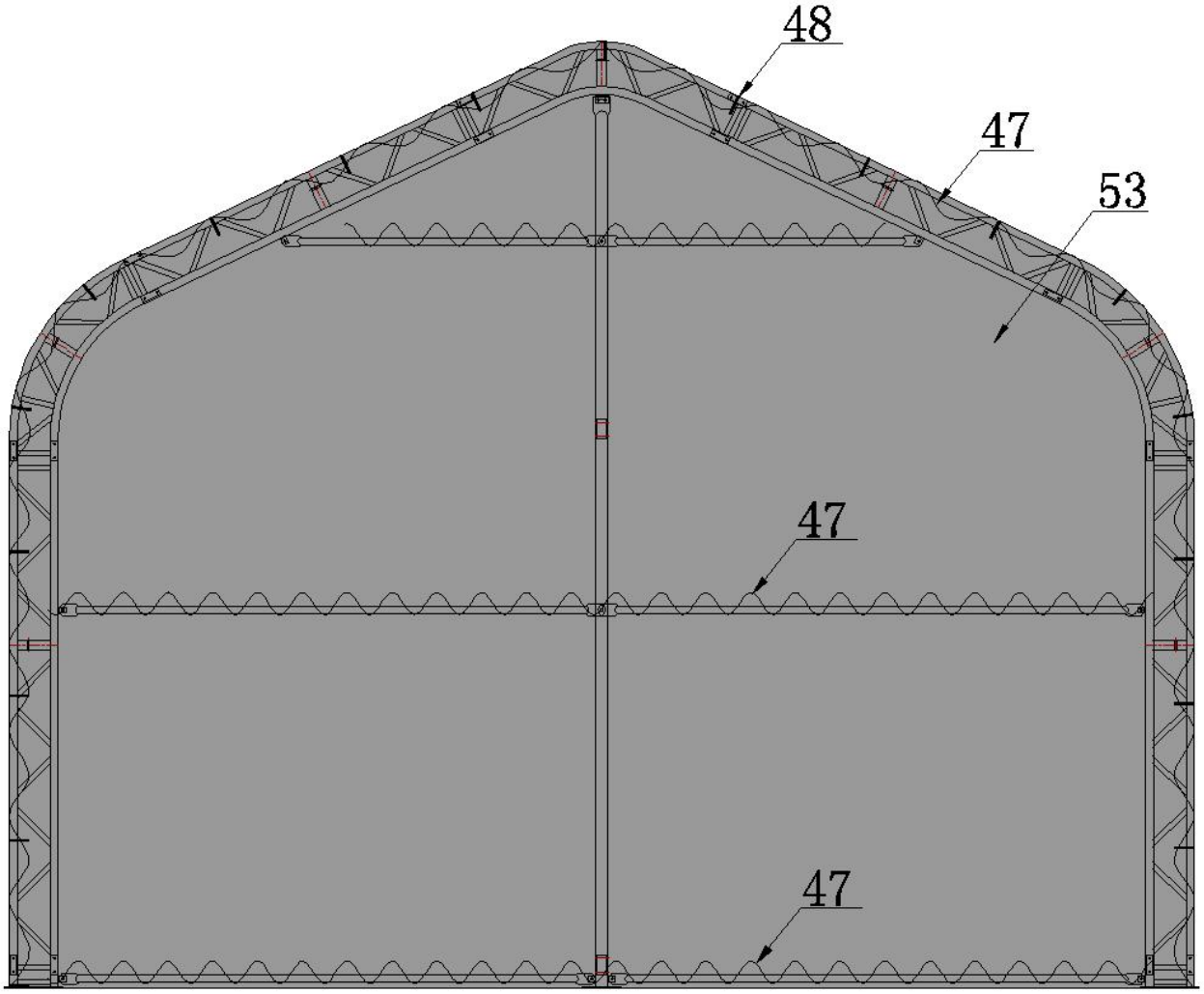

Figure.11

11. Roof Cover Installation

1. Put the Roof Cover EVENLY, CAREFULLY AND SLOWLY on the frame. Insert the Tensioning Tubes (No.9) into the cover pipe pockets and loosely secure the Band (No.14) in the winch on based plate square tube. DO NOT TIGHTEN. Adjust the cover so that it is square and evenly centered on the frame.

Note: The end flaps must overhang evenly at both ends.

2. When roof cover is tidy and ready, drive the ratchet on base plate tie down forth and back and then roof cover is tightened in the vertical direction.

Note: DO NOT LEAVE COVER UNATTACHED UNDER ANY CIRCUMSTANCES.

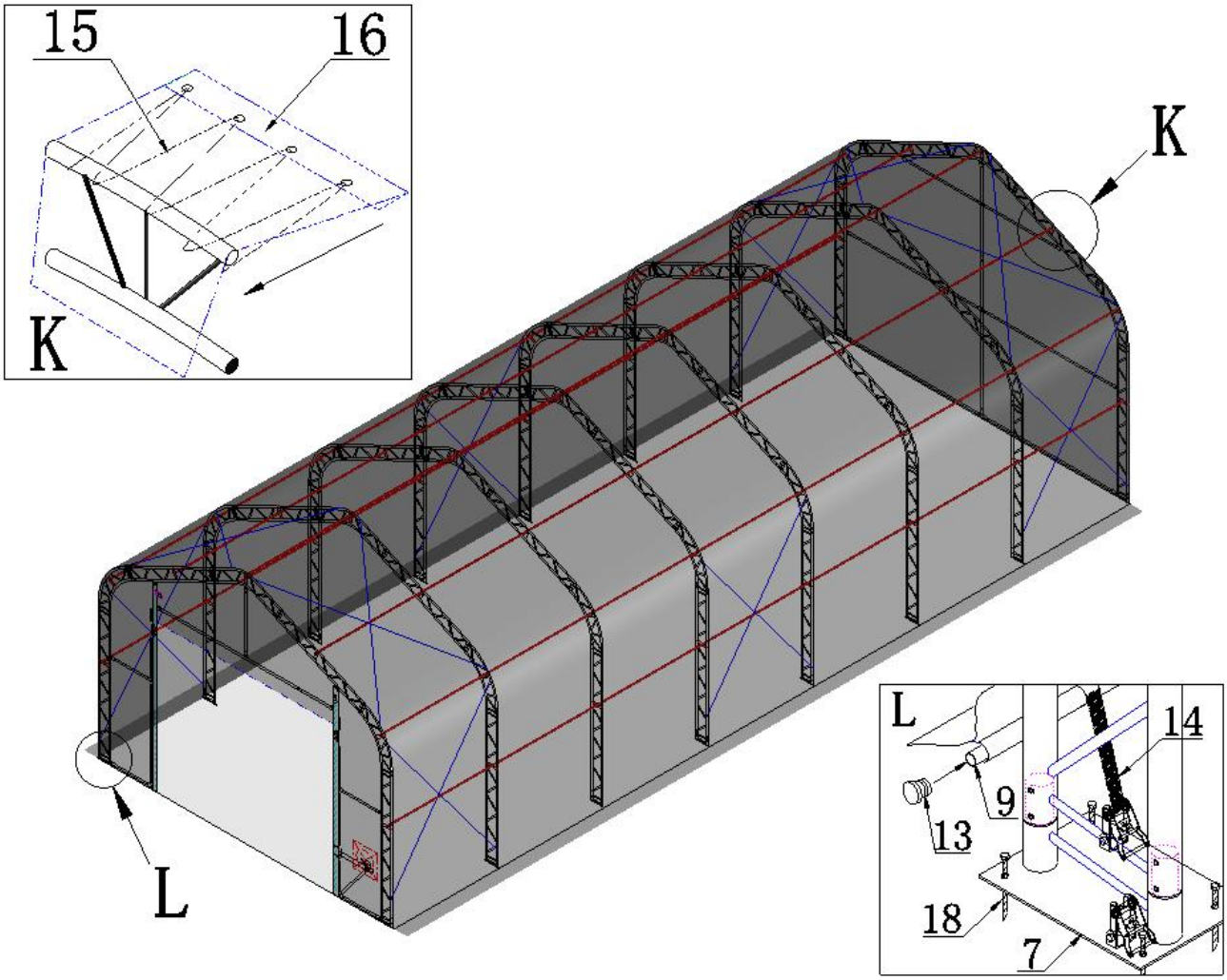

Figure.12

Now your assembly is completed.